Operating Instructions and Owner's Manual

ES3500, ES3500-CA, ES3500E, ES3500E-CA,
ES4000, ES4000-CA, ES4000E, ES4000E-CA,
ES5500, ES5500-CA, ES5500E, ES5500E-CA
ES8000E, ES8000E-CA

PLEASE READ THIS MANUAL CAREFULLY BEFORE OPERATING YOUR NEW PORTABLE GENERATOR

(E) indicates this unit is equipped with Electric Start
(-CA) Indicates this unit is CARB Certified for California

PLEASE READ THE FOLLOWING INSTRUCTIONS!

1. Unit Shipped with “NO OIL” in Engine or where applicable pumps and/or accessories. Check and fill with proper oil as outlined in the Owner’s Manual for the respective product.

2. For repair under Warranty or questions concerning Warranty, DO NOT return this product to the Store where purchased. Follow the procedures as outlined in the “WARRANTY POLICY” and “WARRANTY REGISTRATION” in the Owner’s Manual. For any questions visit www.lifanpowerusa.com or call 1-866-471-7464.

3. Read the “Owner’s Manual” prior to operating any equipment and familiarize yourself with the proper and safe operation of the equipment. If you have any questions visit www.lifanpowerusa.com or call 1-866-471-7464.

This Owner’s Manual is for the Following Models:					
	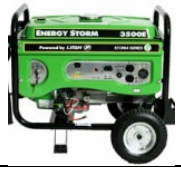	New Item Coming Soon	New Item Coming Soon		
ES3500	**ES3500E**	**ES4000**	**ES4000E**	**ES5500** **ES5500-CA**	**ES8000E**
ES3500-CA	**ES3500E-CA**	**ES400-CA**	**ES4000E-CA**	**ES555E** **ES5500E-CA**	**ES8000E-CA**

(ES) indicates this unit is in the Energy Storm Product Line
(-CA) indicates this unit is CARB Certified for California
(E) indicates this unit is equipped with Electric Start

LIFAN Power USA
2205 Industrial Park Road
Van Buren, AR 72956
866-471-7464
www.lifanpowerusa.com

Table of Contents

LIFAN Power USA
2205 Industrial Park Road
Van Buren, AR 72956
866-471-7464
www.lifanpowerusa.com

Preface

Thank you for choosing LIFAN Power USA for your Power Equipment Needs. LIFAN Power USA prides itself on providing quality products at affordable pricing, creating the "Best Equipment Value on Today's Market!"

All LIFAN Power USA products are manufactured utilizing the latest technology. Built with quality components, your new Power Equipment Product will give you years of dependable service. Your unit, along with all of LIFAN Power USA products are designed, engineered, and manufactured with LIFAN's Industrial Grade Gasoline Engine.

This Owner's Manual will provide you with all of your needed information for your new Power Equipment Product, including Safe Operation and Maintenance of your unit. Please read this Owner's Manual completely and carefully prior to operation. Keep this Owner's Manual for assistance in the future, such as proper maintenance schedules and tips to prolong the life and effective use of your unit. If you require assistance, please visit our website (www.lifanpowerusa.com) or call toll free 866-471-7464.

This Owner's Manual contains information with respect to the newest products at the time of publication. Due to revision and modifications, the information noted in the Owner's Manual might vary from the actual status. This Owner's Manual is subject to change without notice.

FOR ALL WARRANTY AND SERVICE RELATED ISSUES/QUESTIONS DO NOT RETURN YOUR UNIT TO THE STORE OR DEALER WHERE THE ITEM WAS PURCHASED. FOR SERVICE VISIT LIFAN POWER USA'S WEBSITE (WWW.LIFANPOWERUSA.COM) OR CALL 1-866-471-7464. WE WILL BE HAPPY TO HANDLE YOUR WARRANTY ISSUE OR DIRECT YOU TO THE NEAREST "AUTHORIZED SERVICE CENTER."

LIFAN Power USA
2205 Industrial Park Road
Van Buren, AR 72956
866-471-7464
www.lifanpowerusa.com

LIFAN Power USA

PRODUCT SPECIFICATIONS

ENERGY STORM PORTABLE GENERATORS

Model Size	3500	4000	5500	8000
Voltage	120/240V AC & 12V DC	120/240V AC & 12V DC	120/240V AC & 12V DC	120/240V AC & 12V DC
AC Surge Output[1]	3750 Watts	4250 Watts	5500 Watts	8000 Watts
Rated AC Output[2]	3000 Watts	3500 Watts	5000 Watts	7000 Watts
Maximum AC Amperage	26amps @ 120V	34amps @ 120V	40amps @ 120V	62amps @ 120V
AC Cycle	60 Hertz	60 Hertz	60 Hertz	60 Hertz
Regulation	AVR[3]	AVR[3]	AVR[3]	AVR[3]
12V 8.3 amp DC Receptacle	1 ea.	1 ea.	1 ea.	1 ea.
120V 20amp AC Receptacle	2 ea.	2 ea.	4 ea.	4 ea.
120/240V 30amp AC Receptacle	1 ea.	1 ea.	1 ea.	1 ea.
Voltage Selector Switch (Full Power Switch)	1 ea.	1 ea.	1 ea.	n/a
Circuit Protection	Master Circuit Breaker	Master Circuit Breaker	Master Circuit Breaker	Master Circuit Breaker
Statistics Display	Pilot Light	Pilot Light	Pilot Light	Pilot Light

ENGINE

Manufacturer	LIFAN	LIFAN	LIFAN	LIFAN
Model	LF168F2-13111 Recoil LF168F2D-13111 Recoil/Electric	LF170F-13111 Recoil LF170FD-13111 Recoil/Electric	LF182F-13111 Recoil LF182FD-13111 Recoil/Electric	LF190F-13111 Recoil LF190FD-13111 Recoil/Electric
Maximum Horsepower (MHP)	6.5MHP	7 MHP	11MHP	15MHP
Engine Displacement	196cc	211cc	337cc	420cc
Starting System	Recoil (Recoil & Electric)[4]	Recoil (Recoil & Electric)[4]	Recoil (Recoil & Electric)[4]	Recoil & Electric
Fuel Tank Capacity	4 Gallons	4 Gallons	6.5 Gallons	6.5 Gallons
Fuel Tank Material	Rust Preventative Coated Steel	Rust Preventative Coated Steel	Rust Preventative Coated Steel	Rust Preventative Coated Steel
Fuel Gauge	Yes	Yes	Yes	Yes
Run Time (@ 50% Load)	12 hours	12 hours	10 hours	8 hours
Sound Level (@ 7m or 23ft)	65 decibels	65 decibels	75 decibels	75 decibels
Engine Type	4-Stroke OHV	4-Stroke OHV	4-Stroke OHV	4-Stroke OHV
Fuel Type	Automotive Grade Unleaded Gasoline	Automotive Grade Unleaded Gasoline	Automotive Grade Unleaded Gasoline	Automotive Grade Unleaded Gasoline
Fuel Compliance	15% Ethanol Mix	15% Ethanol Mix	15% Ethanol Mix	15% Ethanol Mix
Oil Type & Amount	SAE 10w30w 20oz	SAE 10w30w 20oz	SAE 10w30w 32oz	SAE 10w30w 32oz
Low Oil Shutoff Protection	Yes	Yes	Yes	Yes
CARB Certified	(-CA) Models Only	(-CA) Models Only	(-CA) Models Only	(-CA) Model Only

LIFAN Power USA
2205 Industrial Park Road
Van Buren, AR 72956
866-471-7464
www.lifanpowerusa.com

PRODUCT SPECIFICATIONS

DIMENSIONS

Length (inch)	25in	25in	30in	30in
Width (inch)	20in	20in	22in	22in
Height (inch)	19in	19in	23in	23in
Weight (E Model Weight)	107 lbs (117 lbs)	110lbs (120lbs)	185 lbs (190 lbs)	201 lbs

ACCESSORIES

12V Cord, Plug, & Clips	1 ea.	1 ea.	1 ea.	1 ea.
120/240V Male Twist Lock Plug	1 ea.	1 ea.	1 ea.	1 ea.
Spark Plug Wrench	1 ea.	1 ea.	1 ea.	1 ea.
Mobility/Wheel Kit	(E) Models Only	(E) Models Only	All Models	All Models
Battery (not included)	12V 100cca min 5.25"lx3"w	12V 100cca min 5.25"lx3"w	12V 100cca min 7"lx3"w	12V 100cca min 7"lx3"w

Comments

[1] = Temporary Power available for no more than 10 seconds

[2] = Power Available for Continuous Operation

[3] = Automatic Voltage Regulation

[4] = Only (E) Models have Recoil & Electric Start

Lifan Power USA
2205 Industrial Park Road
Van Buren, AR 72956
866 741-7464

For Additional Lifan Product Information, Scan the QR Code to the Left, Or Visit www.lifanpowerusa.com

LIFAN Power USA
2205 Industrial Park Road
Van Buren, AR 72956
866-471-7464
www.lifanpowerusa.com

Safety Instructions

This is the safety alert symbol. It is used to alert you to potential personal injury hazards. Obey all safety messages that follow this symbol to avoid possible injury or death.

For your safety read this manual carefully. Become familiar with the proper operation, care, and maintenance of your LIFAN Power USA generator.

The safety and alert symbol () is used with a signal word (**CAUTION, DANGER, WARNING**), a pictorial and/or safety message to alert you to hazards. **CAUTION** indicates a hazard that, if not avoided, could result in minor or moderate injury. **DANGER** indicates a hazard that, if not avoided, could result in death or serious injury. **WARNING** indicates a hazard that, if not avoided, could result in death or serious injury.

Hazard Symbols and Meanings

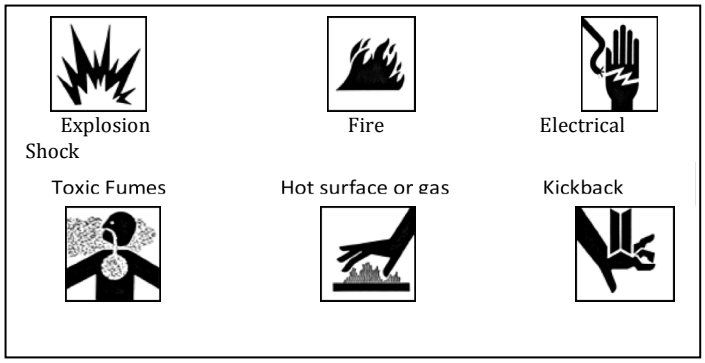

WARNING!

Running generator emits carbon monoxide: an odorless, colorless, poison gas.
Breathing carbon monoxide can cause nausea or death!

ONLY operate generator outdoors.
Exhaust gas must be prevented from entering confined areas.
Direct exhaust gas away from windows, doors, ventilation and other openings.
Do not operate generator inside or under any buildings.
Operating this generator inside the compartment of a recreational vehicle will likely result in death!

WARNING!

The engine exhaust from this generator contains chemicals known to the state of California to cause birth defects, reproductive harm, and cancer.

Do not use this generator within the generator compartment of a recreational vehicle!
This generator does not meet U.S. Coast Guard Regulation 33CFR-183 and should not be used on marine applications.
Use of this generator on marine applications could result in injury or death.

LIFAN Power USA
2205 Industrial Park Road
Van Buren, AR 72956
866-471-7464
www.lifanpowerusa.com

Safety Instructions (continued)

WARNING!

Rapid recoil of starter cord (kickback) may pull hand and arm forward toward engine at a rapid rate.
Broken bones, bruises, sprains, and fractures may result.

- When starting engine, pull cord slowly until tension is felt, and then pull rapidly to avoid kickback.
- Never start or stop engine with electrical devices plugged in and turned on. Doing so is hazardous and will damage generator.

WARNING!

Generator produces powerful voltage!
Only a licensed electrician can safely connect generator to existing utility hookups. Failure to isolate generator from electrical grid can result in death to utility workers as well as others.

- When using generator as backup power, notify utility company. Use approved transfer equipment to isolate generator from electric utility.
- Do NOT operate generator while exposed to rain or other wet conditions.
- Do NOT handle generator when in contact with water.
- Do NOT contact bare wires or receptacles.
- Do inspect all electrical cords for damage and discontinue from use any damaged or excessively worn cords.
- Do NOT allow unqualified persons to operate or service generator.

CAUTION!

Exceeding generators wattage/amperage capacity can damage generator and /or electrical devices connected to it.

- Start the generator and let the engine rpm's stabilize before connecting electrical loads.
- Connect all electrical loads with the device in the off position.
- Turn off electrical loads before shutting off generator engine.

LIFAN Power USA
2205 Industrial Park Road
Van Buren, AR 72956
866-471-7464
www.lifanpowerusa.com

Safety Instructions (continued)

WARNING!

Fuel and its vapors are extremely flammable and explosive.

Fire or explosion can cause severe burns or death.

WHEN ADDING OR DRAINING FUEL

- Turn generator off and let it cool for at least three minutes before removing fuel cap. Loosen cap slowly in order to relieve pressure in the fuel tank.
- Fill or drain fuel tank outdoors. Do not excessively inhale fuel vapors.
- Keep away from open flames or sparks and other sources of ignition.
- Do NOT smoke while filling fuel tank.
- Do NOT overfill tank. Allow space for fuel expansion.

WHEN TRANSPORTING OR REPAIRING EQUIPMENT

- Transport generator with the fuel valve in the off position.
- Repair generator with the fuel tank empty or the fuel valve in the off position.
- Disconnect spark plug wire before transport or service.

WHEN STORING FUEL OR EQUIPMENT CONTAINING FUEL

- Store away from furnaces, stoves, water heaters, clothes dryers or other appliances that have pilot light or other ignition source because they can ignite fuel vapors.

WHEN STARTING EQUIPMENT

- Ensure spark plug, muffler, air cleaner, and fuel cap are in place.
- Do NOT crank engine with spark plug removed.
- If fuels spills, wait until it evaporates before starting engine.

WHEN OPERATING EQUIPMENT

- Do not choke carburetor to stop engine.
- Do not tip engine or equipment at an angle, which causes fuel to spill.
- This generator is not for use in marine applications.

CAUTION!

Excessively high operating speeds (engine revolutions) increase the risk of injury and damage to the generator. Excessively low speeds impose a heavy load and will damage generator.

- Do NOT adjust engine speed governor. Generator supplies correct voltage and frequency at designated speed.
- Modifying generator in any way may be dangerous and will void warranty.

LIFAN Power USA
2205 Industrial Park Road
Van Buren, AR 72956
866-471-7464
www.lifanpowerusa.com

Safety Instructions (continued)

WARNING!

While engine is running temperature may exceed 150°F (65°C).
Server burns may occur.

Exhaust heat/gasses can ignite combustibles, structures or damage fuel tank causing a fire.

- Do NOT touch hot surfaces and do avoid exhaust gasses.
- Allow generator to cool before touching.
- Keep at least 6 ft. (183cm) clearance on all sides of generator including overhead clear.
- Reflective exhaust heat may damage fuel tank causing fire.
- Code of Federal Regulation(CFR) Title 36 Parks, Forests, and Public Property require equipment powered by an internal combustion engine to have a spark arrester, maintained in working order, complying to USDA Forest service standard 5100-1c or later revision. In the state of California a spark arrester is required under section 4442 of the California Public resources code.

WARNING!

Unintentional sparking can result in fire or electrical shock.

WHEN TESTING FOR ENGINE SPARK

- Do NOT check for spark with the spark plug removed.
- Use approved spark plug tester.

WHEN REPAIRING OR ADJUSTING GENERATOR

- Disconnect the spark plug wire from the spark plug and place the wire where it cannot contact spark plug.

CAUTION!

Improper use and care of this generator will cause damage and shorten its lifespan. Failure to follow these actions will void all warranties.

- Use generators only for appropriate and designated purposes.
- The dealer or customer helpline (1-866-471-7464) can instruct you on intended uses.
- Generator must be placed on a level surface.
- Do NOT expose generator to extreme conditions. Excessive dust, moisture, and corrosive vapors will damage unit.
- Cooling slots must be kept clear of debris.
- Do not connect improperly operating devices to generator.
- Shut off generator and take to a qualified service center if the generator fails to operate properly.

Controls and Features

Read this Owner's Manual Completely and Carefully before Operating Generator.

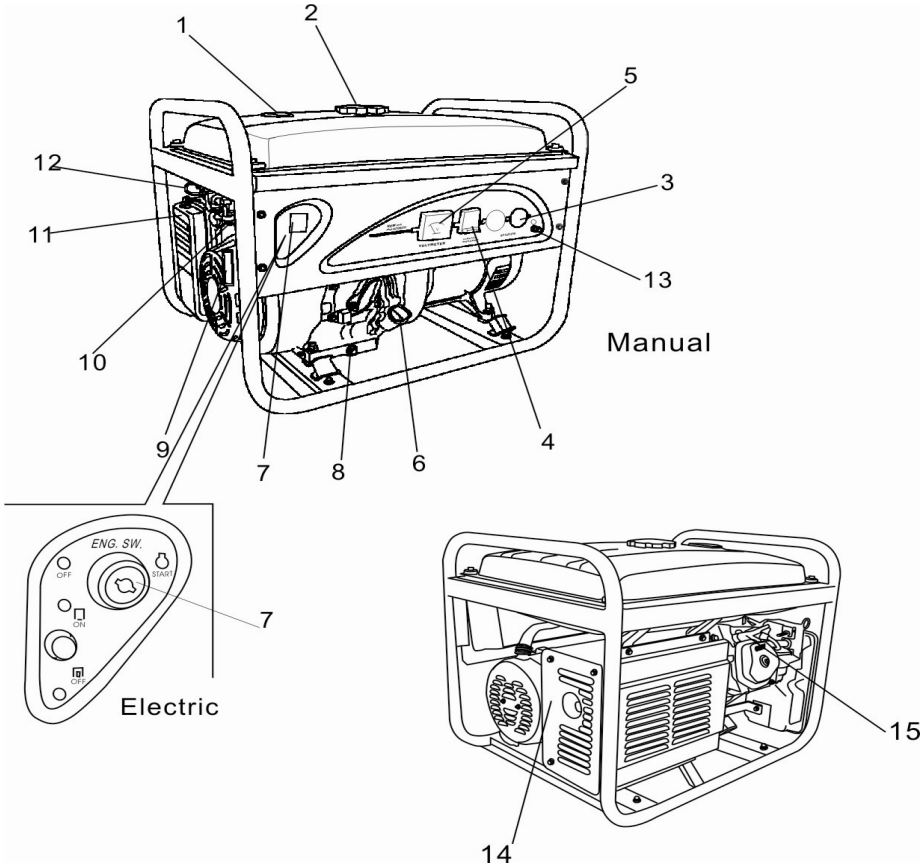

Legend

1. **Fuel Level Sensor** – Displays Current Fuel Level
2. **Fuel Tank Cap** – Vented Fuel Cap Must be Properly Installed at all times during Operation
3. **Receptacle Panel** – See Product Specifications for Individual Model
4. **Double Pole Circuit Breaker (AC)** – Protects Receptacles & Generator from Overload
5. **Pilot Light** – Amber/Green Light to Indicate Generator is Producing Power
6. **Crankcase Oil Dipstick/Oil Fill Hole Cap** – Check/Fill Engine Oil
7. **On/Off Switch** – Rocker Style; Set to "ON" to start Engine & "OFF" to Shut Off Engine; Key Switch Model: Turn to "START" to Crank Engine & "OFF" to Shut Off Engine
8. **Crankcase Oil Drain Plug** – Remove to Drain Oil from Crankcase
9. **Recoil Starting Handle** – Pull Handle to Rotate Engine for Starting

LIFAN Power USA
2205 Industrial Park Road
Van Buren, AR 72956
866-471-7464
www.lifanpowerusa.com

Controls and Features (continued)

10. **Fuel Shutoff Valve** – Turn to "OFF" to Terminate Fuel Delivery to Engine
11. **Air Cleaner** – Check Maintenance Schedule for Service Intervals
12. **Choke** –
    5000 Watts & 8000 Watts Model: Before starting cold generator, pull the choke pin outward from generator to activate the choke lever. After allowing generator to run for a few seconds, push pin inward toward generator.
    3500 Watts & 4000 Watts Model: Before starting cold generator, rotate the choke lever to the left until resistance is felt. After starting the generator, rotate the choke lever to the right to disengage.
13. **Earth Grounding Stud** – Always connect generator to an Earth Grounding Source. Consult Local Energy Jurisdiction for Code Requirements in your area.
14. **Muffler & Muffler Hood** – Exhaust muffler emits combustion gas from engine and lowers the noise level of the generator
15. **Valve Cover** – Cover for Overhead Valves designed to be removed periodically for valve adjustments.

Pre-Operating Instructions: Assembly

Your LIFAN Power USA generator is packaged without fuel and oil. Some assembly is required before operating your LIFAN Power USA Generator.

For further assistance in assembling your generator please visit our website (www.lifanpowerusa.com) or call 1-866-471-7464 between the hours of 9am-5pm Monday-Friday.

BOX CONTENT:

- Generator
- Accessory Kit
  - 2 Piece Spark Plug Removal Tool
  - 1 ea. - 12 Volt Power Cord with Plug & Alligator Clips
  - 1 ea. - Nema14-30 Male Twist Lock Plug
  - RV Adapter Plug for 120 Volt 30amp Service
- Owner's Manual and Warranty Card
- Wheel Kit (All 5000W & 8000W Models; Only 3500W & 4000W Electric Start Models)
  - 2 ea. - Never-Go-Flat Foam Filled Wheels
  - 2 ea. - Heavy Duty Leg Supports (Shipped Stored Under Fuel Tank)
  - 1 ea. - Axle
  - 2 ea. - Folding Handle
  - Hardware Bag

UNPACKING THE GENERATOR:

1. Set the Carton on a Flat, Rigid Surface.
2. Remove All Contents from Carton EXCEPT Generator.
3. Open Box Completely by Cutting Each Corner from Top to Bottom.
4. Leave Generator on the Remainder of the box until Wheel Kit is installed.
5. Locate all Box Contents and Place them Beside the Generator. (Some Items may be Packed within the voids of the Generator itself)

Pre-Operating Instructions: Assembly
(continued)

WHEEL KIT INSTALLATION:

The Following Tools are needed to Install Wheel Kit:

- Safety Glasses
- 8mm-14mm Wrench Set
- 8mm-14mm Ratchet & Socket Set
- 17mm Ratchet & Socket

Wheel Kit Installation Directions:

NOTE: Install Wheel Kit BEFORE Filling the Generator with Fuel or Oil. Never Tip a Unit that contains Fuel or Oil.

1. Tip Generator so Engine End is up.
2. Slide Axle through both Mounting Brackets.
3. Place a Wheel on both Sides as shown in "Assembly Diagram."
4. Securely Tighten Wheel nuts with the 17mm Socket.
5. Tip the Alternator End of the Generator up.
6. Place the Support Legs under the Frame Brace as shown in "Assembly Diagram."
7. Secure with the provided Cap Screws and Hex Nuts. Securely tighten using 12mm Ratchet and Socket.

Pre-Operating Instructions: Battery Specifications

(Electric Start (E) Models Only)

The Battery is NOT included with your Energy Storm Generator. These units require an Acid Cell Battery. This battery is used in many applications, such as lawnmowers, ATV's, motorcycles, etc. and can be found at many retailers and dealers including where you purchased this Power Equipment Product. Use the "Battery Specifications" chart below to attain the specifications of the necessary battery. Or, use the "Cross Reference Models" chart below to match up with the manufacturer's model number with the brand battery available at your local retailer.

BATTERY SPECIFICATIONS				
Generator Model	**Length (inch)**	**Width (inch)**	**Amp (hrs)**	**DC Voltage (Volts)**
ES3500	5.25 in	3 in	10	12V
ES4000	5.25 in	3 in	10	12V
ES5500	5.3125 in	3.1875 in	12	12V
ES8000E	5.3125 in	3.1875 in	12	12V

CROSS REFERENCE MODELS		
Generator Model	**Manufacturer**	**Model Number**
ES3500	Super Start®	CB9B
ES4000	Super Start®	CB9B
ES5500	Excide®	12N12A-4A-1
ES8000E	Excide®	12N12A-4A-1

Note: (-CA) or (E) Models have same Battery Specifications

	Warning
	Follow all the battery manufactures' warnings for proper installing of your battery in order to prevent damage to personnel or equipment.

1. Battery leads consist of a Red (hot) lead that connects to the (+) battery post and is connected to the (+) terminal on the starter solenoid and a Black lead which is connected to the (-) negative battery terminal and the frame mounting bolt.
2. Connect the Red (hot) terminal to the battery.
3. Connect the Black (negative) terminal to the battery.

LIFAN Power USA
2205 Industrial Park Road
Van Buren, AR 72956
866-471-7464
www.lifanpowerusa.com

ASSEMBLY DIAGRAM

Energy Storm Portable models 3500 TO 8000 WATTS

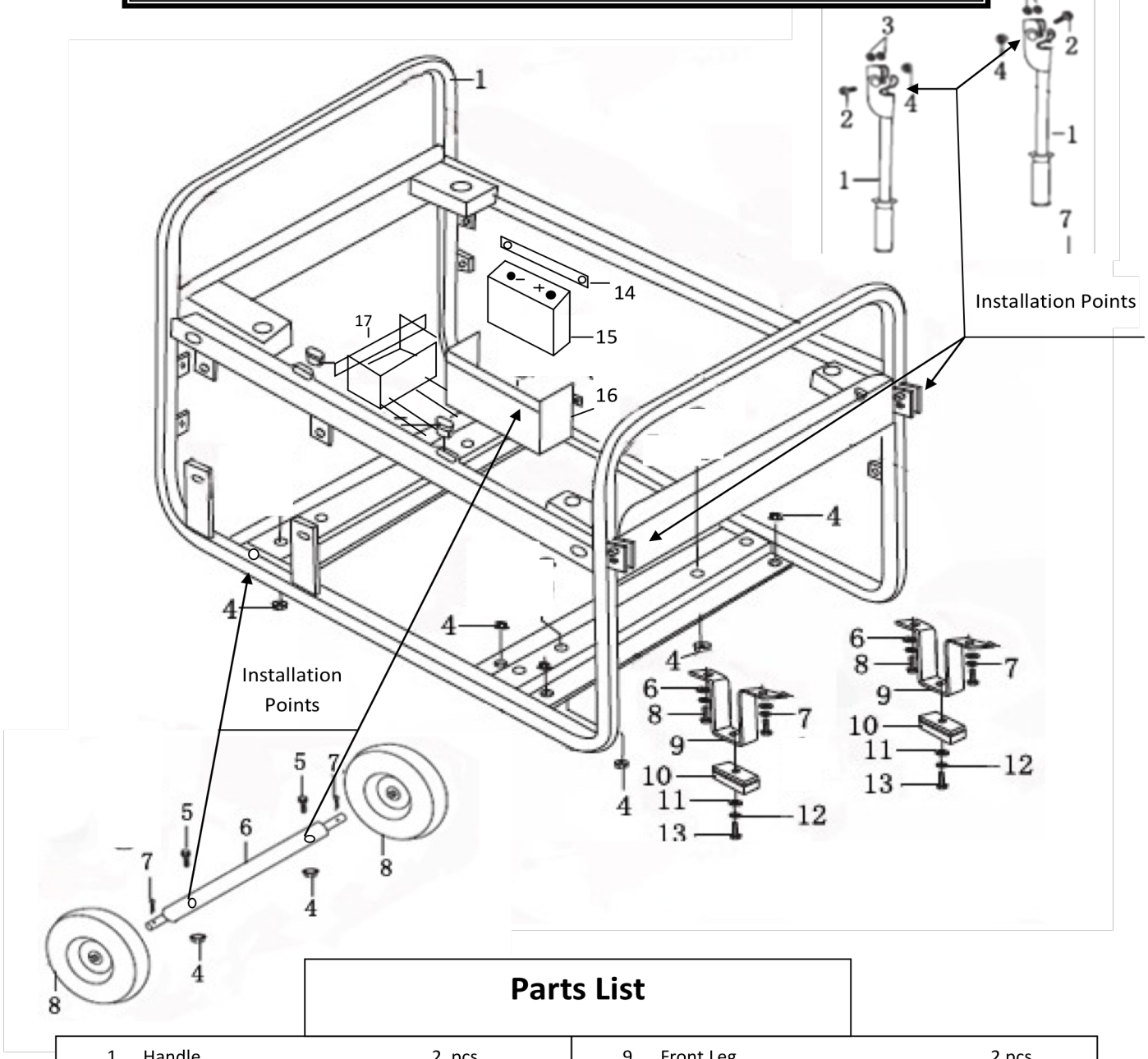

Parts List

1.	Handle	2 pcs.
2.	Flange bolt 8mm×45mm	2 pcs.
3.	Nylon Washers.8mm	4 pcs.
4.	Nut M8	12 pcs
5.	Flange bolt 8mm×60mm	2 pcs
6.	Axle	1 pc.
7.	Cotter Pin	2 pcs
8.	Tire & Wheel Assembly	2 pcs
9	Front Leg	2 pcs
10	Leg Skid Pad	2 pcs
11	Flat washer 6mm	2 pcs
12	Spring washer 6mm	2 pcs
13	Flange bolt 6mm×16mm	2 pcs
14	Battery hold down strap	1 pcs
15	12 volt Battery (not included)	1 pc.
16	Battery Box 5000- 8000 watt models	
17	Battery Box 3500 watt models	

⚠ CAUTION! Assemble generator before adding fuel or oil.

Pre-Operating Instructions: Generator Setup

CAUTION: Any attempt to start the generator before it has been properly serviced may result in engine failure.

ADD ENGINE OIL:

1. Place generator on level surface.
2. Clean area around Oil Hole Dipstick/Plug & Unscrew Oil Hole Dipstick/Plug.
3. Fill crankcase with appropriate type and amount of oil. Refer to "Product Specifications" section for oil type and amount.
4. Replace Oil Hole Dipstick/Plug and tighten securely.

WARNING!

Fuel and its vapors are extremely flammable and explosive.

Fire or explosion can cause severe burns or death.

WHEN ADDING FUEL

- Turn generator off and let it cool for a minimum of three minutes before removing fuel cap. Turn and remove cap slowly in order to relieve residual tank pressure.
- Always fill the fuel tank with the unit outdoors.
- DO NOT overfill tank. Allow room for fuel expansion.
- Keep fuel away from sparks, open flames, heat, pilot lights, and other ignition sources.

ADD FUEL:

1. Clean area around fuel cap, then remove fuel cap.
2. Pour fresh clean regular automotive grade unleaded fuel with a minimum octane rating of 85 into fuel tank. Do NOT mix fuel with oil. Fuel must have ethanol blend of 15% or less. Pay close attention to the storage requirements of these fuels. Do NOT overfill fuel tank. Fill level should not be higher than the bottom of the fuel filler neck.
3. Install the fuel cap. Rotate the fuel cap clockwise until it is in its locked position. Wipe away any spilled fuel.

CAUTION: Alcohol-blended fuels (gasohol, ethanol, or methanol) will attract moisture, which leads to separation and formation of acids during storage. Acidic gas can damage the fuel system of an engine while in storage. To avoid engine problems, the fuel system should be treated with a fuel stabilizer or drained if the generator will not be started for 30 days. If using a fuel stabilizer, follow the manufactures recommended

Pre-Operating Instructions: Generator Setup (continued)

instructions for use. Always use stabilizer with a full tank of gasoline. Always drain old fuel and use fresh fuel before next use. If you do not use a fuel stabilizer the fuel system must be drained and cleaned. Drain the fuel tank and start the engine and allow it to run until all fuel lines and carburetor are drained of fuel. Before restarting the carburetor. Float bowl must be removed and cleaned of any debris.

NEVER use chemical solvents or cleaners in the fuel tank for damage may occur.

Voltage Selector Switch

The 3500 Watt, 4000 Watt and 5500 Watt Models are equipped with a "Full Power" voltage selector switch. This switch allows the operator to chose between 120/240 Volt AC "Dual Power" operation and 120 Volt "Full Power" operation. The 120/240 Volt AC "Dual Power" operation allows the duplex receptacles to provide 120 Volt AC electricity and the NEMA L14-30 twist lock receptacle to provide 240 Volt AC electricity. The 120 Volt "Full Power" mode, allows the duplex AND NEMA L14-30 twist lock receptacle to provide 120 Volt AC electricity.

When exclusively operating 120 Volt AC items with your generator, place the voltage selector switch in the 120 Volt "Full Power" position. This will double the effective power available at 120 Volts, as compared to 120/240 Voltage "Dual Power" mode.

LIFAN Power USA
2205 Industrial Park Road
Van Buren, AR 72956
866-471-7464
www.lifanpowerusa.com

Operation of Generator

HOW TO USE YOUR GENERATOR

GENERATOR LOCATION:

WARNING!

Running generator gives off carbon monoxide gas. It is odorless, colorless, and highly toxic.
Breathing carbon monoxide gas can leads to fainting, nausea or may result in death.

- Only operate generator outdoors.
- Prevent exhaust gas from entering, through windows doors or ventilation intakes, any confined areas.
- DO NOT operate generator inside any enclosed or roofed areas. This includes the generator compartment of any recreational vehicle (RV).

STARTING THE ENGINE:

CAUTION!

Never start or shutoff the generator with electrical loads connected and in the operational mode (on switch activated). Starting or shutting off the generator with electrical loads activated may result in damage to the generator.

1. Unplug all electrical loads from the generator.
2. Make sure the generator is in a level position.
3. Open the fuel shutoff valve. (Refer to item 10 in Controls and Features Section)
4. For cold engine starts only: Pull the choke pin to the engaged position per the instruction label on the generator main frame. (Refer to item 12 in the Controls and Features Section)

PULL START (RECOIL) ONLY MODELS:

5. Place the On/Off switch in the “ON” (I) mode (item 7 in Controls and Features Section)
6. Grasp starter handle (item 9 in Controls and Features Section) and pull slowly until resistance is felt. Then pull the cord rapidly with a full arm stroke. Allow the rope to return slowly. Do NOT allow the rope to snap back against housing.
7. Once the engine runs for 3-5 seconds, push the choke pin in to disengage.

Operation of Generator

HOW TO USE YOUR GENERATOR
(continued)

ELECTRIC/PULL (RECOIL) START MODELS:

5. Using provided key, turn the key switch to the "ON" position. Rotate the key one more position to the "START" position in order to engage the starting motor. Hold key switch in the "START" position until engine starts for NO MORE than 10 engine rotations. If the engine does NOT start repeat procedures beginning with step 1.
6. Once the engine runs for 3-5 seconds, push the choke pin in to disengage.

NOTE (all models): If generator does not start within three pulls, check the crankcase oil level. The engines "Low Oil Shutdown Protection" circuit may be activated and preventing the engine from starting.

CONNECTING ELECTRICAL LOADS:

1. Plug in desired 120 Volt load to the 120 Volt U-Ground receptacles or the 120 Volt NEMA 14-30 twist lock receptacle.
2. Do NOT connect 240 Volt loads to the 120 Volt receptacles.
3. Only connects single phase 60 Hertz loads.
4. **DO NOT OVERLOAD THE GENERATOR. FOLLOW THE PROVIDED "GENERATOR WATTAGE REFERENCE WORKSHEET" TO DETERMINE THE RUNNING AND STARTING WATTAGE OF YOUR EQUIPMENT, REFER TO THE PRODUCT SPECIFICATIONS TO ENSURE YOUR GENERATOR WILL OPERATE THE DESIRED EQUIPMENT.**

NOTE: Use the running and starting wattage provided by the equipment manufacturer if available. If not available, use provided "Generator Wattage Reference Worksheet."

LIFAN Power USA
2205 Industrial Park Road
Van Buren, AR 72956
866-471-7464
www.lifanpowerusa.com

Operation of Generator

HOW TO USE YOUR GENERATOR
(continued)

STOPPING THE GENERATOR:

1. Unplug all electrical loads or turn the main breaker to the “OFF” position.
2. In order to stabilize internal equipment temperatures, allow the engine to run for 3-5 minutes under no load.
3. If the generator will not be in use for more than 7 days, turn the fuel valve (item 10 in the Controls and Features Section) to the “OFF” position and allow the unit to run until the fuel in the carburetor is used and the engine shuts itself off.
4. Turn the ignition switch to the “OFF” position.
5. Allow unit to cool to ambient temperature before storage or transportation.
6. Always transport the generator with the fuel valve (item 10 in the Controls and Features Section) in the “OFF” position. Failure to do so will result in damage to the engine.

LIFAN Power USA
2205 Industrial Park Road
Van Buren, AR 72956
866-471-7464
www.lifanpowerusa.com

Storing the Unit

STORAGE

Before long term storage of your power equipment product, typically 30 days or more, perform the following:

1. Set the fuel cock (valve) to the "OFF" position.
2. Let the unit continue to run until it stops itself, burning all of the fuel in the fuel system.
3. Turn the ignition switch to the "OFF" position.
4. Drain the engine oil in accordance with the "Oil Change Procedures" in this Owner's Manual's Maintenance section. Do NOT re-fill with oil until ready to use again.
5. Remove the Spark Plug in accordance with the "Spark Plug Maintenance" in the Owner's Manual's Maintenance section. Spray a lubricant, such as WD40®, into the Spark Plug hole to lubricate the top of the piston and walls of the cylinder. Replace the Spark Plug.
6. Pull starter rope until resistance is felt. This will place the valves in the closed position.
7. Add the recommended amount of fuel stabilizer, in accordance with the amount recommended by the manufacturer of the fuel stabilizer, to the unused gasoline left in the fuel tank.
8. Place the unit in a clean, dry, and secure location.
9. Cover with "LIFAN Water Proof Generator Cover," Item Number LF100-69600 not included) or canvas/vinyl tarpaulin. Do NOT operate unit with cover installed.

Maintenance

MAINTENANCE SCHEDULE	
PROCEDURE	**TIME**
Engine Oil Check	Each Use
Replace Engine Oil	After Each 40 Hours of Use (For Initial Break in – After First (1st) 10 Hours of Use
Air Cleaner Filter Check	Each Use
Air Cleaner Filter Replacement	When Needed or After Every 100 Hours of Use
Air Cleaner Wash	When Needed
Spark Plug	
Valve Clearance	Check & Re-adjust annually or after 300 Hours of Use
Fuel Tank	Replace Every 3 Years Based on Condition

NOTE: Refer to Following Procedures for Proper Method to Perform Maintenance

OIL CHANGE PROCEDURES:

Periodic Maintenance of your engine oil should be performed after each 40 hours of use of you Power Equipment Product. Check your engine oil level prior to each use.

1. Start your engine and let it warm up to get the oil warm and thinner. Remove the oil cap/dipstick (item 6 in Controls and Features Section) by turning counter clockwise. Remove the oil drain plug (item 6 in Controls and Features) located below the oil cap/dipstick utilizing the appropriate tools.
   USE CAUTION: THE OIL MAY BE HOT.
2. Drain the engine oil into an approved receptacle and discard in accordance with all Federal and State Regulations. Never dump the used engine oil on the ground or into drains, only discard in an approved manner. Check with your local authorities to determine the regulations in your area.
   WARNING! AVOID SPLASHING OF HOT OIL; IT CAN BURN YOU AND CAUSE SEVERE INJURY.
3. After oil is completely drained, replace oil drain plug and tighten with appropriate tools. Replace oil with the proper oil for your product. Refer to the Product Specifications section for exact fill requirements. Always use your dipstick to check the oil level and only fill to the full mark on the dipstick. Never overfill the engine as this can cause damage to the unit and void warranty.

Maintenance (continued)

OIL CHANGE PROCEDURES (continued):

4. Replace the dipstick/oil cap on the engine. It is NOT ready for use.

PROPER MAINTENANCE OF the UNIT WILL INCREASE THE LIFE OF YOUR PRODUCT. THE OIL MUST BE CHANGED ON A REGULAR BASIS FOR PROPER OPERATION, AND RELIABILITY AND TO ALSO MAINTAIN THE WARRANTY ON THIS PRODUCT.

AIR CLEANER MAINTENANCE:

1. Remove the clip (item 9 in "Air Cleaner A" below) or the wing nut (item 7 in "Air Cleaner B" below) to remove and check the air filter element.
2. For Sponge Type Air Filters, wash with soap and water when contaminated. Squeeze excess liquid from air filter element, and allow the air filter element to dry.
   For Paper Type Air Filters, replace with the correct Air Filter for your unit. They are available at your dealer or from LIFAN Power USA. Order your filter by calling toll free 866-471-7464.
3. Re-Install the air filter element into the air filter housing.

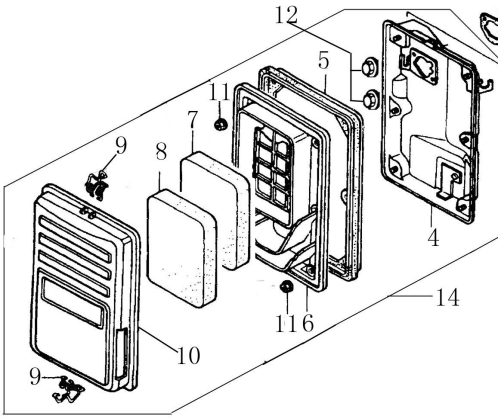

Air Cleaner A

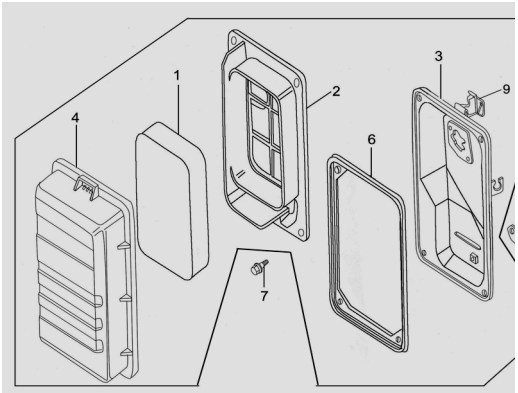

Air Cleaner B

LIFAN Power USA
2205 Industrial Park Road
Van Buren, AR 72956
866-471-7464
www.lifanpowerusa.com

Maintenance (continued)

SPARK PLUG MAINTENANCE:

1. Remove Spark Plug Cap (refer to "Spark Plug Cap Removal" figure below.)
2. Remove Spark Plug with socket and handle supplied with your unit (refer to "Spark Plug Removal" figure below.)
3. Clean any carbon build-up around the Spark Plug.
4. Check the Spark Plug Gap and adjust if necessary. 0.30-inch gap.
5. Lubricate the threads of the Spark Plug with anti-seize compound or engine oil.
6. Re-install the Spark Plug and Spark Plug Cap.

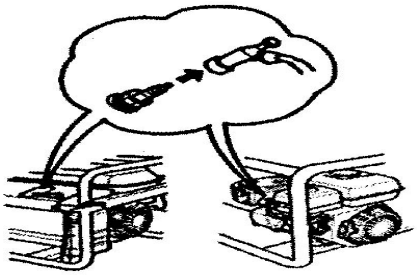

Spark Plug Cap Removal

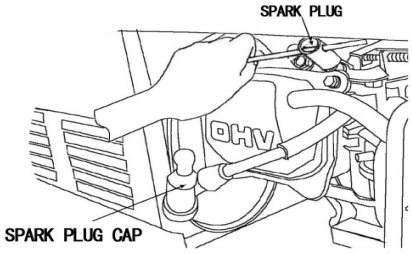

Spark Plug Removal

FUEL SYSTEM MAINTENANCE:

NOTE: Periodically you can get sediment or trash in your Carburetor Bowl. Use the following procedures to clean:

1. Turn the fuel cock (valve) to the "OFF" Position.
2. Remove the carburetor bowl by removing the mounting bolt located at the bottom of the bowl.
3. Dump out the oil fuel and sediment into an approved container and clean carburetor bowl thoroughly.
4. Fit a new rubber washer into place and re-attach fuel bowl to the carburetor.

NOTE: Removal of the drain screw at the bottom of the bowl can drain the fuel to remove smaller debris that has collected in the bowl.

5. After bowl is securely back in place, turn the fuel cock (valve) to the "ON" position for use.
6. Units equipped with a pre-filter for fuel will have a filter housed just below the fuel cock. Remove the fuel filter element (refer to "Fuel Filter Element Removal"

Maintenance (continued)

FUEL SYSTEM MAINTENANCE (continued):

diagram below) and either clean or replace the fuel filter element. Re-assemble the fuel filter element (refer to "Fuel Filter Element Assembly" diagram below.)

Fuel Filter Element Removal

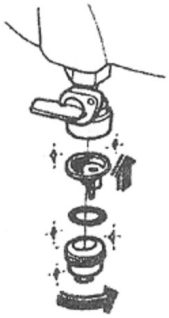

Fuel Filter Element Assembly

LIFAN Power USA
2205 Industrial Park Road
Van Buren, AR 72956
866-471-7464
www.lifanpowerusa.com

Troubleshooting

IF YOUR ENGINE WILL NOT START:

1. Check to ensure switches are in the "ON" position. (Both unit and engine)
2. Check engine oil level. Your unit possesses a Low Oil Shutdown feature that will not allow your engine to start if the oil is below safe operating levels. This feature is installed to increase the life of your engine and prevent engine damage. If oil level is low, fill to the full mark on dipstick. Refer to the Product Specifications for exact oil type and amounts.
3. Check the fuel level to insure adequate fuel. Add fuel if necessary.
4. Remove and inspect the spark plug for cleanliness and proper electrode gap. If needed, clean or replace the spark plug. Refer to Spark Plug Maintenance in the Maintenance section of the Owner's Manual for proper procedure.
5. If your unit will still NOT start after performing the above checks, call our customer hotline at LIFAN Power USA Toll Free 1-866-471-7464 or take your unit to an authorized Service Center.

NOTE: Periodically on the initial start-up or after the unit has been stored for a long period of time the float for the "Low Oil Shutdown" system will stick to the bottom of your oil pan. Locate the two (2) wires to the Low Oil Sensor Diode (figure "Low Oil Sensor Diode" to the right) located on the side of the engine block. Unplug these wires and, **only after ensuring the engine is full of oil,** start the engine and allow to run until warm (normally 20 minutes, as this will heat the oil and release the float on the Low Oil Shutdown System). Then re-plug the wires to the terminals on the Low Oil Shutdown Sending Unit.

UNIT DOES NOT PROVIDE ELECTRICAL CURRENT:

1. Plug in a small appliance or tool to test.
2. Check if the AC Circuit Breaker is in the "ON" position. If not, place in "ON" position. If equipped with a GFCI receptacle, re-set GFCI Breaker by pushing in the reset button in the middle of the GFCI's face plate (this must be done with the engine running).
3. On units equipped with a 120-120/240 Volt current selector switch, ensure the switch is in the proper position. For 120 Volt only operation, place the switch to the side marked with the 120V designation. For 240 Volt operation ensure the switch is in the 120/240 Volt location. If the Voltage Selector Switch is placed in the middle position, it will NOT provide electrical output.

Troubleshooting (continued)

UNIT DOES NOT PROVIDE ELECTRICAL CURRENT (continued):

4. If your unit still does NOT produce electricity after performing the previous checks, call LIFAN Power USA at 1-866-471-7464, your dealer, or authorized Service Center.

Generator Safety

1. **Never operate gasoline engine powered products in any enclosed spaces, as they product deadly Carbon Monoxide Poisonous Gases.**
2. **Never hook a generator directly to your home circuit without the proper installation by a Licensed Electrician and without the proper power transfer devices.**
3. **Do NOT operate your power equipment in inclement weather such as rain, snow, and/or sleet.**
4. **Do NOT operate your power equipment within five (5) feet of any flammable materials.**
5. **When refueling the power equipment never smoke or refuel near any flame or ignition devices. Never refuel while the unit is running. If during the refueling process some fuel is spilled, always completely clean the fuel and allow sufficient drying time prior to re-starting the unit. Gasoline vapors ignite easily and are very dangerous.**
6. **NEVER ALLOW CHILDREN OR ANIMALS TO BE NEAR THIS EQUIPMENT DURING OPERATION. ONLY QUALIFIED PERSONS SHOULD OPERATE THIS EQUIPMENT. PLEASE FOLLOW ALL GUIDELINES CONTAINED IN THIS OWNER'S MANUAL FOR THE SAFE OPERATION OF THIS EQUIPMENT.**

Wire Diagram

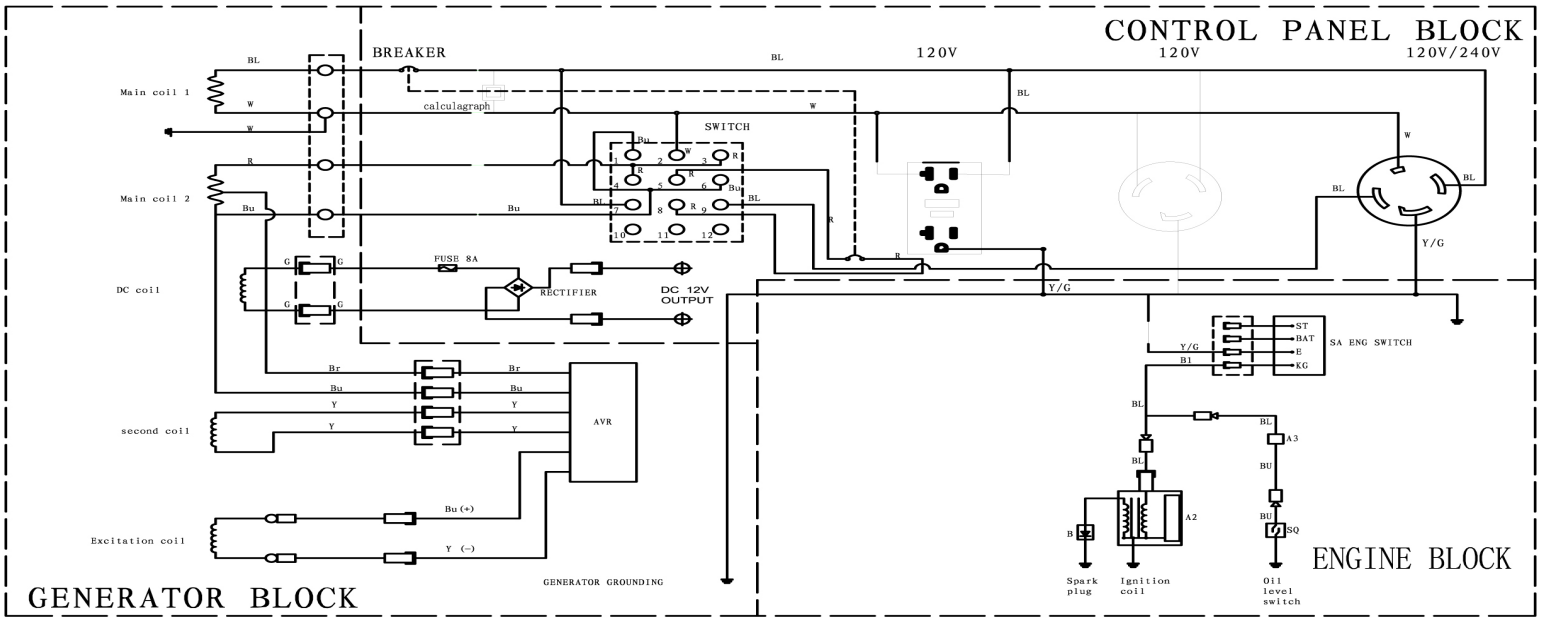

Voltage selector

	1–2	4–5	7–8	10–11	2–3	5–6	8–9	11–12
120V	ON	ON	ON	ON	OFF	OFF	OFF	OFF
120/240V	OFF	OFF	OFF	OFF	ON	ON	ON	ON

ENG SWITCH

	KG	E	BAT	ST
OFF				
ON				
START				

colour

BL	Black	R	Red
Y	Yellow	W	White
BU	Blue	Br	Brown
G	Green		

MANUAL START Models ES3500, ES3500-CA, ES4000, & ES4000-CA

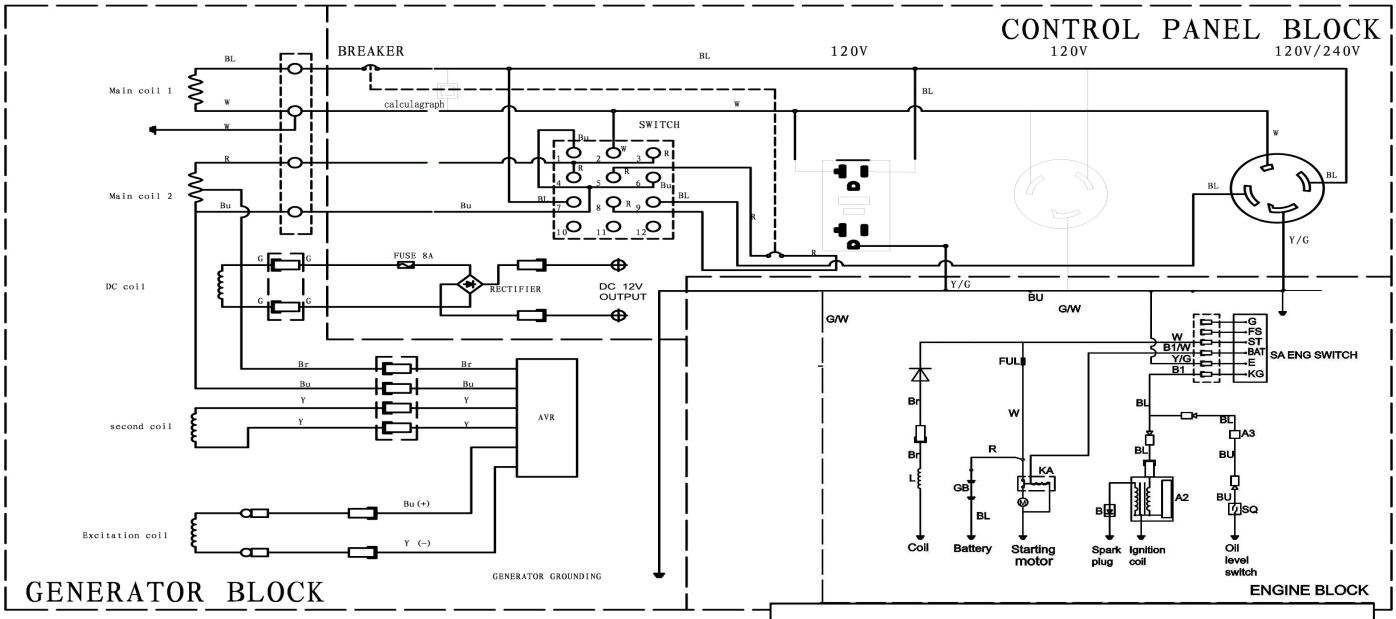

Voltage selector

	1–2	4–5	7–8	10–11	2–3	5–6	8–9	11–12
120V	ON	ON	ON	ON	OFF	OFF	OFF	OFF
120/240V	OFF	OFF	OFF	OFF	ON	ON	ON	ON

ENG SWITCH

	KG	E	BAT	ST
OFF				
ON				
START				

colour

BL	Black	R	Red
Y	Yellow	W	White
BU	Blue	Br	Brown
G	Green		

ELECTRIC START Models ES3500E, ES3500E-CA, ES4000E, & ES4000E-CA

LIFAN Power USA
2205 Industrial Park Road
Van Buren, AR 72956
866-471-7464
www.lifanpowerusa.com

Wire Diagram (continued)

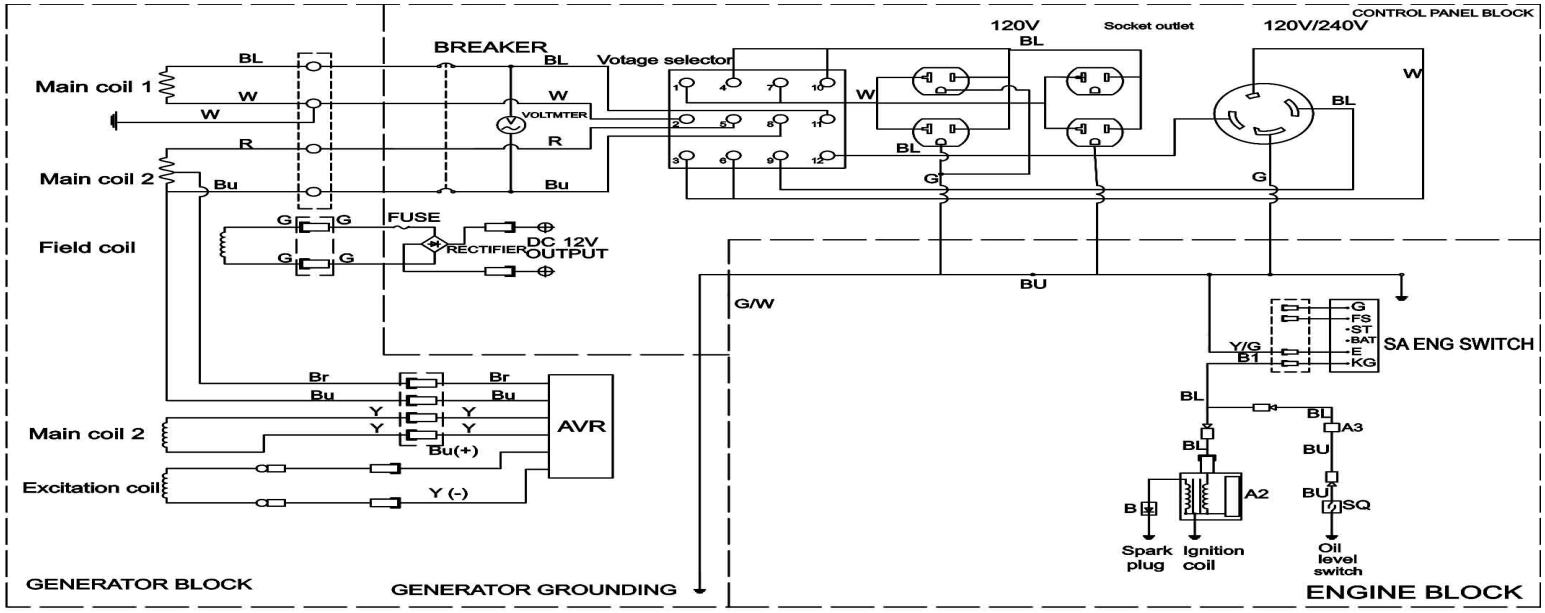

Voltage selector

	1-2	4-5	7-8	10-11	2-3	5-6	8-9	11-12
120V	ON	ON	ON	ON	OFF	OFF	OFF	OFF
120/240V	OFF	OFF	OFF	OFF	ON	ON	ON	ON

ENG SWITCH

	KG	E	BAT	ST
OFF	⊖	⊖		
ON				
START				

BL	Black	R	Red
Y	Yellow	W	White
BU	Blue	Br	Brown
G	Green		

MANUAL START Models ES5500 and ES5500-CA

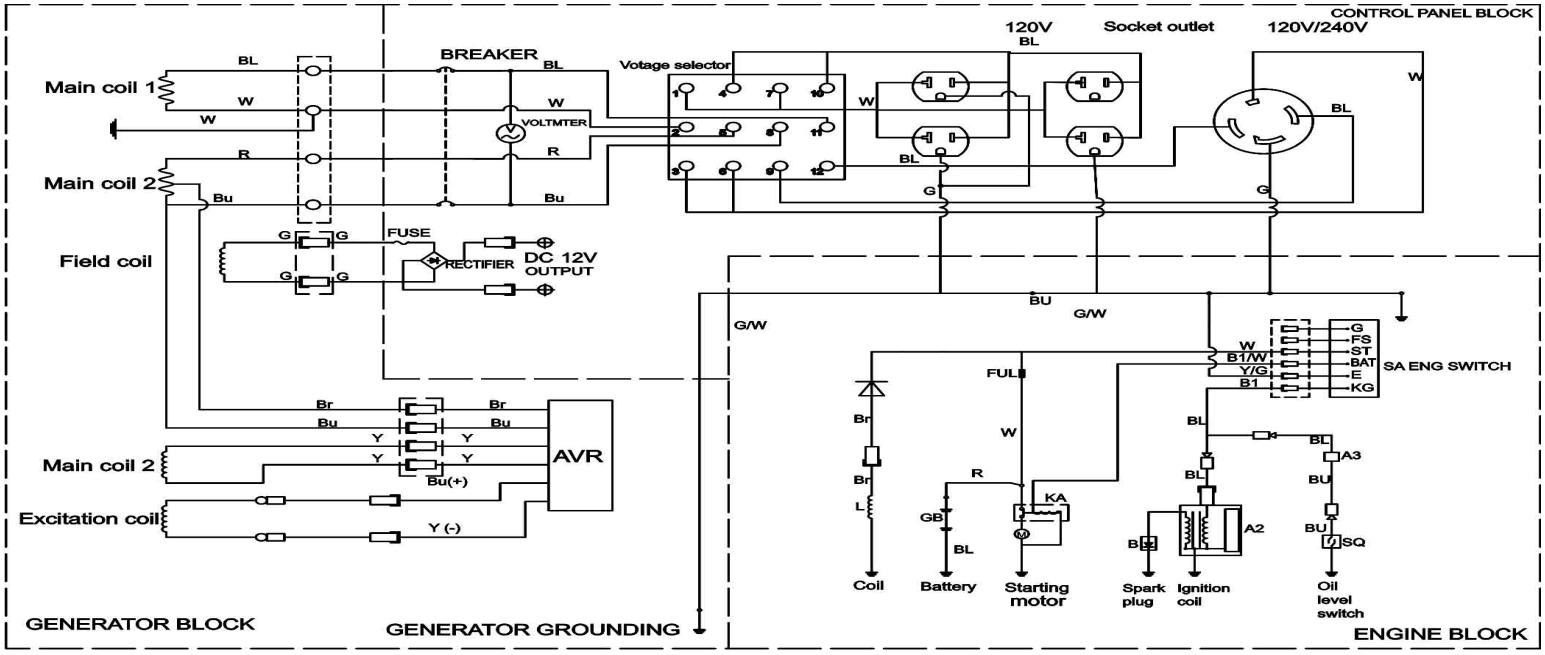

Voltage selector

	1-2	4-5	7-8	10-11	2-3	5-6	8-9	11-12
120V	ON	ON	ON	ON	OFF	OFF	OFF	OFF
120/240V	OFF	OFF	OFF	OFF	ON	ON	ON	ON

ENG SWITCH

	KG	E	BAT	ST
OFF	⊖	⊖		
ON				
START			⊖	⊖

BL	Black	R	Red
Y	Yellow	W	White
BU	Blue	Br	Brown
G	Green		

ELECTRIC START Models ES5500E, ES5500E-CA, ES8000E, & ES8000E-CA

LIFAN Power USA
2205 Industrial Park Road
Van Buren, AR 72956
866-471-7464
www.lifanpowerusa.com

Wattage Reference Chart

Tool/Appliance	Rated (Running) Watts	Additional Starting Watts	Tool/Appliance	Rated (Running) Watts	Additional Starting Watts
HOME					
ESSENTIALS:			**KITCHEN:**		
Cell Phone Charger	25	0	Electric Stove 8" Element	2100	0
40 Watt Light Bulb	40	0	Blender	500	1000
60 Watt Light Bulb	60	0	Coffee Maker	1200	0
75 Watt Light Bulb	75	0	Dishwasher - Hot Dry	540	1500
Deep Freezer	500	500	Electric Can Opener	175	0
Electric Water Heater	4000	0	Food Processor	400	0
Mini Fridge	600	200	George Foreman Grill	750	0
Refrigerator/Freezer	750	1600	Microwave Oven - 1000W	1000	0
Sump Pump - 1/2 HP	1050	2200	Microwave Oven - 625W	625	0
Sump Pump - 1/3 HP	800	2100	Toaster	775	0
Water Well Pump - 1/3 HP	1250	3750	Toaster Oven	1200	0
HEATING/COOLING:			**FAMILY ROOM:**		
Humidifier - 13 Gallon	175	0	Color TV - 27"	500	0
Central AC - 10000 BTU	1500	3000	Alarm Clock	25	0
Central AC - 24000 BTU	3800	4950	iPad	50	0
Central AC - 40000 BTU	6000	6750	Lamp	100	0
Furnace Fan Blower-1/2 HP	800	2350	Laptop	250	250
Furnace Fan Blower-1/3 HP	700	1400	LCD TV - 32"	100	0
Heat Pump	4700	4500	Plasma TV - 50"	500	0
Space Heater	1650	0	Stereo Receiver	450	0
Window AC - 10000 BTU	1050	2100	VCR/DVD Player	100	0
Window AC - 12000 BTU	3250	3950	X-Box, PlayStation	100	0
LAUNDRY ROOM:			**OTHER:**		
Clothes Dryer - Gas	700	1800	1/2 HP Garage Door Opener	900	2400
Clothes Dryer - Electrical	5400	1350	Curling Iron	1500	0
Iron	1100	0	Hair Dryer - 1200 Watt	1200	0
Washing Machine	1000	3000	Security System	550	0
WORK					
DIY/JOB SITE:			**DIY/JOB SITE:**		
Air Compressor - 1/3 HP	300	780	Quartz Halogen Work Light, 1000	1000	0
Air Compressor - 1 HP	1400	3600	Quartz Halogen Work Light, 300	300	0
Airless Sprayer - 1/3 HP	600	1200	Quartz Halogen Work Light, 500	500	0
Belt Sander	1000	3250	Reciprocating Saw	1080	2700
Circular Saw - 7 1/4"	1600	4500	Table/Radial Arm Saw	1800	4500
Cordless Tool Battery Charger	1000	0	**Office Equipment**		
Electric Drill - 1/2", 5.4 amps	750	1250	Copy Machine	1600	0
Electric Drill - 3/8", 4 amps	480	1000	Computer w/ 17" Monitor	750	0
Hammer Drill	1100	2500	Fax Machine	75	0
Miter Saw - 10"	1800	3600	Ink Jet Printer	100	0
Planar/Jointer - 6"	1800	2500	Laser Printer	900	0
RECREATION					
TAILGATING/CAMPING:			**TAILGATING/CAMPING:**		
AM/FM Radio	100	0	Crock Pot	250	0
Box Fan - 20"	150	0	Electric Grill	1600	0
DVD Player	75	0	Inflator Pump	200	0
LCD TV - 13"	200	0	Outdoor Light String	250	0
Plasma TV - 13"	250	0	Portable Heater	625	1500

NOTE: These Values are Estimates. Check Tool/Appliance for Exact Wattage Requirements

Customer Service: 1-866-471-7464 www.lifanpowerusa.com

LIFAN Power USA
2205 Industrial Park Road
Van Buren, AR 72956
866-471-7464
www.lifanpowerusa.com

Generator Wattage Required

This worksheet will aid in determining the generator that best fits your needs based on the appliances/tools you wish to power simultaneously! The larger the generator, the more items you may power at once.

To Determine the Generator you Require, Follow these Four Easy Steps Below:

1.) Use the "Personal Power Requirements" Chart below, the list the tools/appliances you plan to power simultaneously. Fill in the required Rated (Running) Watts and Starting Watts using the "Wattage Reference Chart" on the previous page.

2.) Sum the Rated (Running) Watts and list the total in the "Total Running Watts" space provided on the "Personal Power Requirements" Chart.

3.) Review the Starting Watts of each item on your "Personal Power Requirements" Chart and choose the largest value. List this value in the "Largest Additional Starting Watts Required" space provided.

4.) Add the " Largest Additional Starting Watts Required" to the "Total Running Watts." List this value in the "Total Starting Watts" space provided.

Example

Tool/Appliance	Rated (Running) Watts	Additional Starting Watts
1.) Mini Fridge	600	200
2.) Coffee Maker	1200	0
3.) 32" LCD TV	100	0
4.) Laptop	250	250
5.) Cell Phone Charger	25	0
6.)		
7.)		
8.)		
9.)		
10.)		
Total Running Watts:	2175	
Largest Additional Starting Watts Required:	250	
Total Starting Watts:	2425	

For this Example, a Generator with a minimum of ___2175___ Total Running Watts and ___2425___ Total Starting Watts is required.

Personal Power Requirements

Tool/Appliance	Rated (Running) Watts	Additional Starting Watts
1.)		
2.)		
3.)		
4.)		
5.)		
6.)		
7.)		
8.)		
9.)		
10.)		
Total Running Watts:		
Largest Additional Starting Watts Required:		
Total Starting Watts:		

I Require a Generator with a minimum of _____ Total Running Watts and _____ Total Starting Watts is required.

Comments

* If the Rated (Running) Watts or the Starting Watts of a tool/appliance is unavailable, use Watts = Voltage * Amps as an estimation.

* If the Rated (Running) Wattage is known, the Starting Wattage can be estimated. Starting Watts = 1 to 3 Times the Rated Watts

* Only one Starting Wattage is needed because only one item will cycle or start at the same time

NOTE: These Values are Estimates. Check Tool/Appliance for Exact Wattage Requirements
Customer Service: 1-866-471-7464 www.lifanpowerusa.com

LIFAN Power USA
2205 Industrial Park Road
Van Buren, AR 72956
866-471-7464
www.lifanpowerusa.com

Limited Warranty Policy

This warranty is limited to the following LIFAN Power and Storm Series products that are distributed by the Equipsource LLC, dba LIFAN Power USA, located at 2205 Industrial Park Road, Van Buren, AR 72956. Effective 04/25/2010

LENGTH OF WARRANTY

	Residential Use[2]			Commercial/Rental[3]
Products Covered	**Year 1**	**Year 2**	**Year 3**	**Warranty NOT to exceed 300 hours or terms listed below:**
Walk Behind Mowers	Full Unit: Parts & Labor	Full Unit: Parts Only	Engine: Parts Only	Full Unit: 3 Months Parts & Labor
Water Pumps	Full Unit: Parts & Labor	Full Unit: Parts Only	Engine: Parts Only	Full Unit: 12 Months Parts & Labor
Generators/Inverter Generators	Full Unit: Parts & Labor	Full Unit: Parts Only	Engine: Parts Only	Full Unit: 12 Months Parts & Labor
Pressure Washer Engines	Full Unit: Parts & Labor	Full Unit: Parts Only	Engine: Parts Only	Full Unit: 12 Months Parts & Labor
Pressure Washer Pumps[1]	Full Unit: Parts & Labor	N/A	N/A	Full Unit: 12 Months Parts & Labor
Gasoline Engines	Full Unit: Parts & Labor	Full Unit: Parts Only	Engine: Parts Only	Full Unit: 12 Months Parts & Labor
Gasoline Powered Welders	Full Unit: Parts & Labor	Full Unit: Parts Only	Engine: Parts Only	Full Unit: 6 Months Parts & Labor

Pressure Washer Pumps[1] - All LIFAN Pressure Pro™ and Storm Series Pressure Storm™ pressure washers are equipped with Annovi Reverbi ™ high pressure water pumps, which are warranted by the manufacturer's One (1) Year Limited Warranty. Visit www.lifanpowerusa.com for details.
Residental Use[2] - Residential Use is definted as items that are for personal use.
Commerical/Rental[3] - Commerical or Rental use is defined as any usage for income producing or other business related uses.

In order to qualify for the limited warranty, the product(s) must be purchased in North America from an authorized EquipSource, LLC dealer, or a dealer authorized by EquipSource, LLC to sell LIFAN products. This warranty is non-transferable and applies only to the original purchaser. The supplied "Warranty Registration Card" must be completed and on file with EquipSource, LLC (at the supplied address), at the time that any warranty claim is made. The "Warranty Registration Card" must be submitted with a receipt of purchase, which clearly states the date of purchase.

During the warranty period (stated above), EquipSource, LLC will repair or replace, at its' option, any part that is proven to be defective in material or workmanship under normal usage. Repairs and/or replacement will be made without charge for parts or labor. All parts found to be defective must be returned to EquipSource, LLC. Upon reception of the parts, a judgement as to the validity of the warranty claim wil be determined. All parts replaced under warranty will be considered part of the original product and any warranty on those parts will coincide with the original warranty.

To obtain Warranty Service, you must take the product, at your expense, to an authorized LIFAN Power Products or Storm Series Power Products service center. If you are unable to locate warranty service or are disssatisfied with the warranty service that you recieve, contact EquipSource, LLC at 866-471-7464. At EquipSource's discretion, EquipSource, LLC may elect to replace a defective unit. In this case, the end user is responsible for all shipping and handling chargers associated with the exchange.

This warranty is not valid for products or parts affected or damaged by accident, collision, normal wear, fuel contamination, abuse, neglect, misuse, alteration, unsuitable use, and/or unauthorized parts replacement. Mower decks and blades are specifically not warranted for impact or abrasive damage. Warranty becomes void if the customer fails to install, maintain, and/or operate this product is accorance with the instructions and recommended actions of LIFAN set for in the owner's manual. Equipsource, LLC disclaims any responsibility for time loss or loss of usage of the product, transportation, commercial loss, or any other incidental or consequenial damage. Prior to any warranty service an approval code must be issued to the service center in order for the warranty claim to be valid. Any implied warranties are limited to the duration of this written limited warranty. This warranty gives you specific legal rights, and you may also have other rights, which may vary from state to state.

Exclusions to Warranty:
- Failure to perform "Periodic Maintenance" as required and specified in the supplied "Owner's Manual."
- Improper repair of product or replacement of parts with non-OEM (Original Equipment Manufacturer) parts.
- Operation in uses and methods other than those outlined in the "Owner's Manual."
- Service and/or repairs performed by anyone other than an "Authorized LIFAN or Storm Series Products Service Center."

More Information Available on our website: www.lifanpowerusa.com EquipSource, LLC 2010 Revised 04/25/2010

LIFAN Power USA
2205 Industrial Park Road
Van Buren, AR 72956
866-471-7464
www.lifanpowerusa.com

Please Read this Owner's Manual Carefully Before Operating Your New Generator.

This Owner's Manual includes the operation and maintenance of the ES3500, ES3500-CA, ES3500E, ES3500E-CA, ES4000, ES4000-CA, ES4000E, ES4000E-CA, ES5500, ES5500-CA, ES5500E, ES5500E-CA, ES8000E, and ES8000E-CA.

Thank you for purchasing our Energy Storm generator!

For Product Support and Service Please Scan the QR Code Below or Visit Us at www.lifanpowerusa.com or Call Toll Free 1-866-471-7464

LIFAN Power USA
2205 Industrial Park Road
Van Buren, AR 72956
866-471-7464
www.lifanpowerusa.com