Installer's Guide

Home Standby Generator Automatic Transfer Switch

TR15REG-DB (15Kw single-phase)
TR20REG-DB (20Kw single-phase)
TR22REG-DB (22Kw single-phase)
TR20REG-3-DB (20K three-phase)

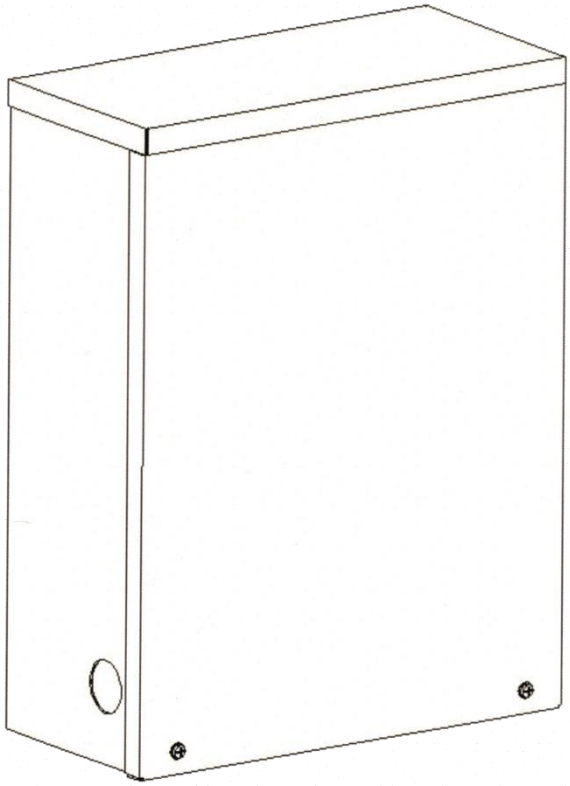

Note: *"Graphics in this document are for representation only. Actual model may differ in appearance."*

⚠ SAFETY INSTRUCTIONS

Only qualified personnel should install and service the equipment. The installation, starting up, and servicing of home standby generator equipment can be hazardous and requires specific knowledge and training. Improperly installed, adjusted or altered equipment by an unqualified person could result in death or serious injury. When working on the equipment, observe all precautions in the literature and on the tags, stickers, and labels that are attached to the equipment.

Table Of Contents

"KEEP THIS MANUAL WITH THE UNIT TO TRANSFER WITH OWNERSHIP OF THE EQUIPMENT"

Preface

The Automatic Transfer Switch (hereafter referred to as ATS) uses world-famous ATS or AC Contactors as the main switches and are manufactured from advanced and closely controlled production processes. It is combined with all our automatic generators to form a complete and thorough Automatic Transfer System.

The DKG-173 Transfer Controller is installed inside the ATS, which applies to three phase or single phase systems with phase voltage of 220v AC. Pluggable connectors are connected with external connections, which make the maintenance, inspection, or replacement easy and convenient.

We have 125A single phase ATS, 125A three phase ATS, and 200A single phase ATS for your different needs in various conditions.

Functions

ATS has control functions (such as generator start-up delay, mains restore delay and voltage detection, etc.). When the ATS is connected to automatic generators, the generator's control box will send the transfer signal in order to transfer loads automatically. It can operate with our automatic control systems or other brands that have remote-start self-control functions which are simple and economic.

Control Mode
Generation/Automatic/Mains

LED Display
Mains Available
Mains on Load
Generator Available
Generator on Load

Parameter Settings
M. VOLT. SET: Mains Voltage Normal Value Setting, 75%-100% settable
VOLT. 100% = 170-300V
MCT: Closing Delay Time after Mains Voltage returns to normal, 0-40 MIN. settable GCT: Closing Delay Time after Generator Voltage returns to normal, 0-40S settable
G. VOLT. SET: Generator Voltage Normal Value Setting, 75%-100% settable
VOLT. 100% = 170-300V
Protection Function: Mains/Generator low voltage protection

Important Safety Instructions

SAVE THESE INSTRUCTIONS! Read the following information carefully before attempting to install, operate or service this equipment. Also read the instructions and information on all tags, decals, and labels that may be affixed to the transfer switch. Throughout this publication, and on tags and decals affixed to the generator, DANGER, WARNING, CAUTION and NOTE blocks are used to alert personnel to special instructions about a particular operation that may be hazardous if performed incorrectly or carelessly. Observe them carefully. Their definitions are as follows:

DANGER

After this heading, read instructions that, if not strictly complied with, will result in personal injury or property damage.

WARNING

After this heading, read instructions that, if not strictly complied with, may result in personal injury or property damage.

CAUTION

After this heading, read instructions that, if not strictly complied with, could result in damage to equipment and/or property.

This symbol points out important safety information that, if not followed, could endanger personal safety and/or property.

This symbol points out potential explosion hazard.

This symbol points out potential fire hazard.

This symbol points out potential electrical shock hazard.

Important SafetyInstructions

- Remove all jewelry (such as rings, watches, bracelets, etc.) before working on this equipment.
- If work must be done on this equipment while standing on metal or concrete, place insulative mats over a dry wood platform. Work on this equipment only while standing on insulative mats.
- Never work on this equipment while physically or mentally fatigued.
- Keep the transfer switch enclosure door closed and bolted at all times. Only qualified personnel should be permitted access to the switch interior.

Equipment Description

The automatic transfer switch is used for transferring electrical load from a UTILITY (NORMAL) power source to an EMERGENCY (STANDBY) power source.

Mounting

- This model automatic transfer switch is designed for use only with Trane home standby generator sets.
- Install the transfer switch as close as possible to the electrical loads that are to be connected to it. Mount the switch vertically to a rigid supporting structure.
- To prevent switch distortion, level all mounting points. If necessary, use washers behind mounting holes to level the unit.

Connecting Power Source and Load Line

- Wiring diagrams and electrical schematics are provided in this manual.
- Before connecting wiring cables to terminals, remove any surface oxides from the cable ends with a wire brush. All power cables should enter the switch next to transfer mechanism terminals. If ALUMINUM conductors are used, apply corrosion inhibitor to conductors.
- Tighten terminal lugs to the torque values as noted on the decal located on the inside of the door. After tightening terminal lugs, carefully wipe away any excess corrosion inhibitor.

Operation Instructions

Automatic Mode

1. Move the control switch of the ATS Control Panel on the AUTO position, the control mode of the generator is "AUTO".

2. When mains are on load, the indicators "Mains Available" and "Mains On Load" will light up.

3. When mains failure occurs or utility is abnormal, the generator will be controlled by the Control Box for "Start-up Delay" automatic start.

4. When the generator has started and the voltage is normal, the "Generator Available" indicator lights up. If the ATS automatically switches the generator on, and the "Generator On Load" indicator lights up.

5. When the utility is restored, the "Mains Available" indicator lights up. The ATS automatically transfers to the mains side after the generator control box has sent the "Mains on Load" signal. The "Generator on Load" light goes off and the "Mains on Load" indicator lights up.

6. When the ATS control box detects that generator voltage is normal, the "Generator Available" indicator lights up. The ATS transfers to the generator side when the GCT time setting is set on conditions of "Generator on Load".

Fault Inspection and Troubleshooting

All our products will be strictly inspected before delivery in order to guarantee the quality of products. Unreliability caused by users' improper installation and misuse can be checked in accordance with the following instructions. Please contact us or the nearest dealer for help if faults are still unresolved.

1. The Main Switch has no action

A. The start-up delay has not finished. Please wait.

B. Verify whether the lines are correctly connected, especially the mains power source, the generator power source, and load lines.

C. Check if the control lines from the ATS to the Control Box are correctly connected.

2. Indicators do not work

A. Verify whether lines are correctly connected or not, especially the mains power source, the generator power source, and load lines.

B. Check if the setting of each control panel delay potentiometer is correct.

3. Generator does not start in case of utility outage

A. Verify whether the ATS Control Panel control switch and generator are set in the "AUTO" position.

B. Check if the control lines from ATS to the generator's Control Box are correctly connected.

Specifications	
Outside Size:	495 x 375 x 180
Operation Temp	-20°C to 70°C (-4°F to 158°F)
Storage Temp	-40°C to 85°C (-40°F to 185°F)
Humidity	5 to 95% cannot freezing
Weight (Kg)	17.5

Controller DKG-173 Specifications	
Generating voltage	170-300V-AC (Ph-N phase line-null line)
Mains voltage	170-300V-AC (Ph-N phase line-null line)
Generator contactor delay	1s to 40s, adjustable
Mains regain delay	1s to 40s, adjustable
MCB relay output	10A@250V-AC
GCB relay output	10A@250V-AC
Remote start relay output	10A@250V-AC/28V-DC
Operation temp.range	- 30°C (-22°F) to 70°C (158°F)
Storage temp. range	-30°C (-22°F) to 80°C (176°F)
Max Humidity	95% non-condensing (non-condensation)
Size	70 x 115 x 66mm (W x H x D)
Weight	180g
Installation method	DIN-rail mounting
Enclosure material	Heat Resistant ABS/PC (UL94-VO) plastic
Protection lever	IP20

Automatic Transfer Switch Spec Data	
Working Volt (Ue)	AC400V
Rated Isolation Volt	690V
Frequency	60HZ
Rated Working Current (A)	200A
Rated Short-time Withstand Current	10KA
Rated Limited Short-circuit Current	25KA
Operating Torque (N.m)	12
Conversion Time (S)	< 80
Mechanical Endurance (times)	10000
Poles	2P

DKG-173

DIN RAIL MOUNTED ATS CONTROLLER WITHOUT DC SUPPLY

DESCRIPTION

The DATAKOM model DKG -173 is a DIN Rail mounted ATS controller not requiring DC supply.

The unit monitors 3-phase phase mains voltages sends remote start command to the generating set and performs changeover of both generator and mains contactors.

The Front Panel LED provides information about mains and generator power availability as well as contactor positions.

Mains return delay and genset contactor delays are adjustable between 1 and 40 seconds through front panel knobs.

FEATURES

- DIN Rail mounted
- No DC supply required
- Adjustable MCB and GCB delays
- 10A/250V AC MCB and GCB outlets
- 10A/28V DC/250V AC remote start output
- Isolated mains and generator set inputs

OPERATION

When the mains exist while all its phase voltage are below the limit 1/

- If R, MC, RST LEDs are on.
- The MCB terminal is supplied with voltage R.
- The REMOTE START relay contact is open.
- The REMOTE START relay contact opens.

If any phase voltage of mains is over the limit

- R, MC, RST LEDs turn off.
- The MCB terminal is open.
- The REMOTE START relay contact closes.

The REMOTE START output is expected to provide a generator set running condition.

When the generator set voltage, G is over the limit

- The G LED turns on
- At the expiration of the generator set contactor delay, the GC LED turns on and the GCB terminal is supplied with voltage G.

DKG-173 Specifications

Inputs:

R-S-T: mains phase voltages
NEUT-MN: mains neutral terminal
G: generator phase voltage
NEUT-GN: generator neutral terminal

Outputs:
MCB-MAINS CONTACTOR: normally open relay output connecting the phase-R voltage to the terminal (10A @ 250V AC)
GCB-GENERATOR CONTACTOR: normally open relay output connecting the phase-G voltage to the terminal (10A @ 250V AC)
REMOTE START: normally open engine start request relay output (10A @ 28V DC / 250V AC)

LED Indicators:
G: generator set voltage present
GC: generator set contactor closed
R: power supplied from mains
RST: mains voltage present
MC: mains contactor closed

Technical Specifications:

Alternator voltage:
170-300V AC (Ph-N)
Mains Voltage:
170-300V AC (Ph-N)
Generator contactor delay:
1 to 40 seconds (adjustable)
Mains return delay:
1 to 40 seconds (adjustable)
MCB relay output:
10A @ 250V AC
GCB relay output:
10A @ 250V AC
Remote start relay output:
10A @ 250V AC / 28V DC
Operating temperature:
-30 C (-22 F) to 70 C (158 F)
Storage temperature:
-30 C (-22 F) to 80 C (176 F)
Maximum humidity:
95% non-condensing

Dimensions:
70 x 115 x 66mm (W x H x D)
Weight:
180g (approx.)
Installation:
DIN Rail mounted
Case Material:
High Temp. ABS/PC (UL94-V0)
IP Protection:
IP20

Conformity (EU directives)
-2006/95/EC (low voltage)
-2004/108/EC (EMC)

Norms of reference:
EN 61010 (safety requirements)
EN 61326 (EMC requirements)

Application Range

MCTRANS Series Dual power transfer switches (ATSE MCTRANS Series Dual power transfer switches (ATSE) are advanced products which adopted the early twentieth century technology. It can used for two-way power source infrequently transferred switched with rated insulation voltage AC800V and DC250V, rated current 20 to 5000A, rated frequency 50 or 60 Hz.

It mainly applied in occasions where need uninterruptible power supply, such as malls & office buildings, post communications, fire-fighting, military, mines, ship & vessel, escalator & elevator and industrial assembly lines, etc. in order to meet the assembly lines, etc. in order to meet the requirements of providing more reliable power sources.

The products are characterized by its small size, easy operation, fast switching speed and high reliability.

MCQ2 Model is double segments (without Neutral Position, transfer sequence: Mains to Generator) dual power transfer switch.

MCQ3 Model is three segments (with Neutral Position, transfer sequence: Mains to Neutral to Generator) dual power transfer switch.

Standards

IEC60947-1/GBT.14048.1-2000 Low-voltage switch Equipment and control Equipment/General rules

IEC60947-3/GBT.14048.3 Low Voltage Switch Equipment and Control Low Voltage Switch, Isolator, Isolation Switch, and Combined Electronic Equipment

IEC60947-6/GBT.14048.11 Automatic Change-over Switch Circuit

Typical Connection Diagram

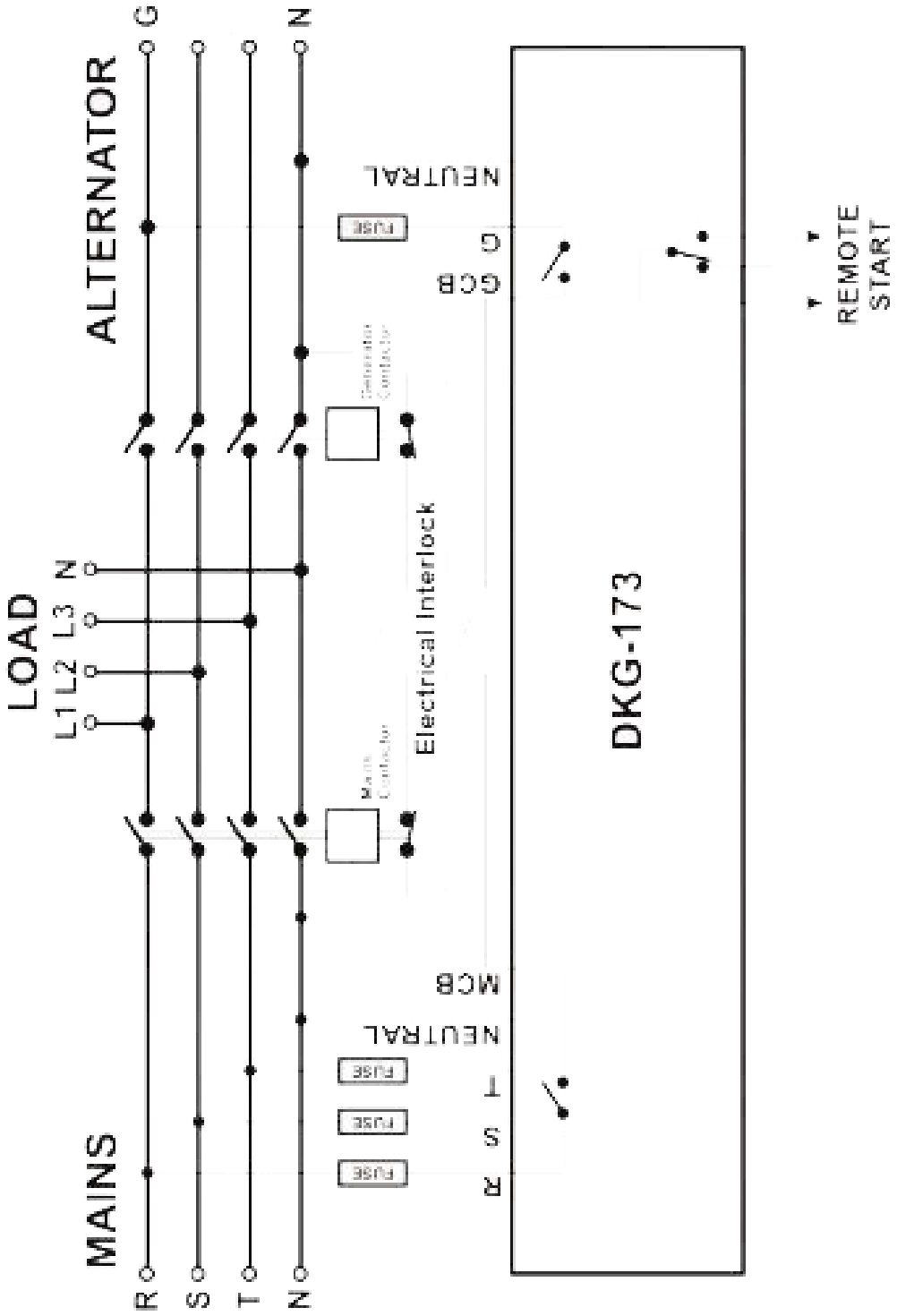

Relevant Models and Implications

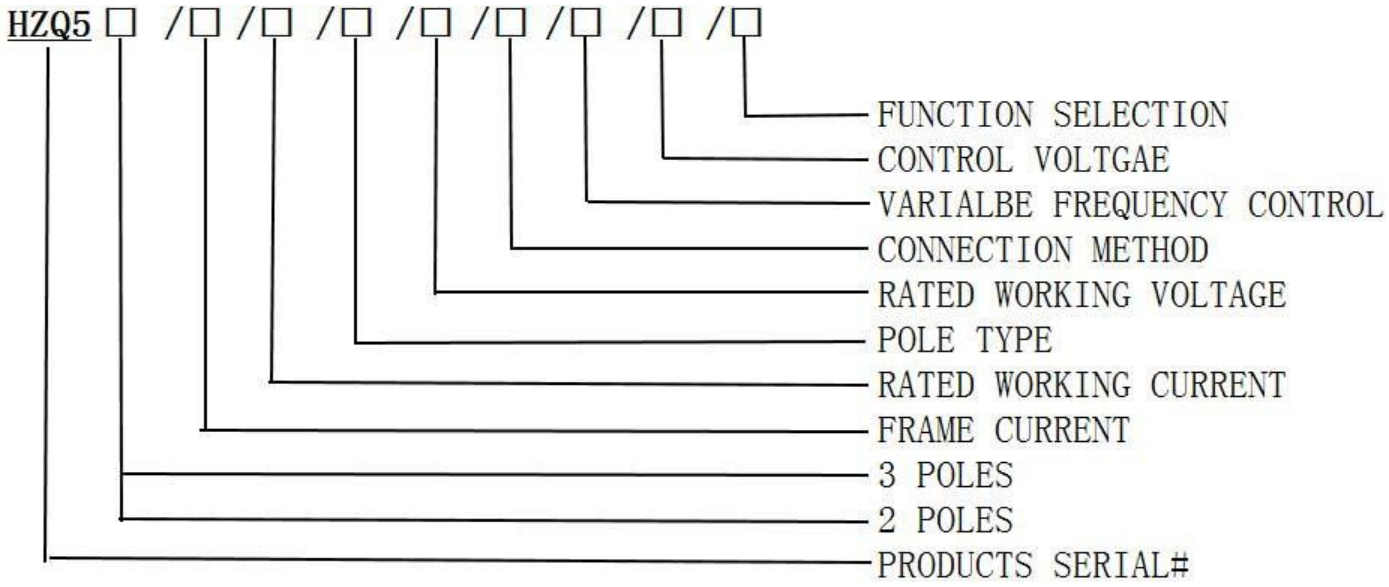

Model	Rated Current	Pole	Rated Voltage	Wiring Method	Control Voltage
MCQ3 three segments with open position	20 40 80 100	2: 2 poles	690V	F: Front	2: 230V AC
MCQ2 double segments without open position	125 160 200 225	3: 3 poles	400V	B: Back	4: 400V AC
	250 350 400	4: 4 poles			

Product Appearance and Parts Description

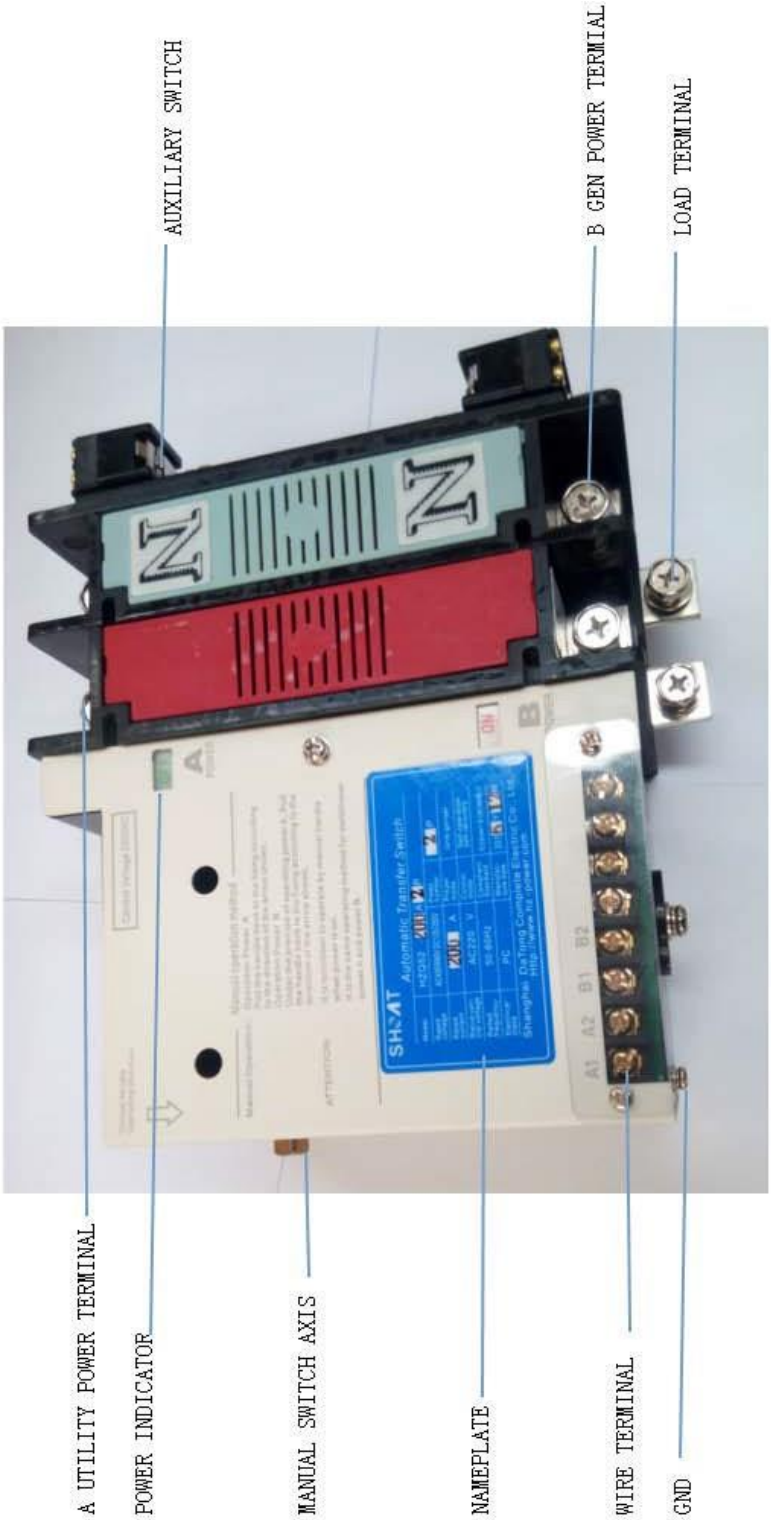

MCQ3 Main Technical Specifications

Model				MCQ3													
Rated Voltage																	
Rated Current				20A-63A			80A-125A			160A-250A			350A-500A			630A-800A	
Coil Quantity				Double Coils													
Wiring Method				Front											Back		
Pole				2P	3P	4P	2P	3P	4P	2P	3P	4P	2P	3P	4P	2P	3P	4P
Weight (Kg)				5.5	6	6.5	6	6.5	7	6	8	10	11	14	18	25	33	42
Operating Current	DC100V (A)			3	3	4	3	3	4	3	4	5	5	5	7	6	6	6
	AC100V/110V (A)			3	3	4	3	3	4	3	4	5	5	5	7	6	6	6
	AC200V/220V (A)			1.5	1.5	2	1.5	1.5	2	2.5	2.5	2.5	2.5	2.5	3.5	3	3	3
Tripping Current	DV100V			1A									1.5A			2A	
	AC100V/110V			1A									1.5A			2A	
	AC200V/220V			0.5A									0.7A			1A	
Perfor-mance	Short-time Withstand Current			5KA						10KA			12KA			15KA	
	Rated Conditional Short Circuit Current			12.5KA						25KA			30KA			37.5KA	
	Connecting and Breaking Capability			AC-33B (101e Connect • 81e Break) cos=0.35 DC-33B 1.1Ie Connect • 1.1Ie Break L/R = 1ms													
	Switching Time	A power side	Control	55ms									60ms			100ms	
			Break	20ms									25ms			30ms	
		B power side	Control	80ms									80ms			135ms	
			Break	20ms									20ms			30ms	
	Life			Electrical: 2500 operations, Mechanical: 10000 operations													
	Operating Recycles			120 operations / hour													
Auxiliary Switch				A power side 1C, B power side 1C, Switch Capacity AC100V 5A AC200V 2.5A DC100V 0.5A													
Accessories				Manual Operation Handle													

MCQ3 Main Technical Specifications (continued)

Model				MCQ3															
Rated Voltage																			
Rated Current				1000A			1250A			1600A			2000A			3150A		4000A	5000A
Coil Quantity				Double Coils															
Wiring Method				Back															
Pole				2P	3P	4P	2P	3P	4P	2P	3P	4P	2P	3P	4P	2P	3P	4P	3P	3P
Weight (Kg)				30	39	49	31	40	51	36	47	59	95	115	135	110	150	190	207	265
Operating Current	DC100V (A)			6	6	8	6	6	6	7	8	9	8	10	12	10	12	14	16	18
	AC100V/110V (A)			6	6	8	6	6	6	7	8	9	8	10	12	10	12	14	16	18
	AC200V/220V (A)			2	3	4	3	3	4	3.5	4	4.5	4	5	6	7	7	8	8	8
Tripping Current	DC100V			2A									4A							
	AC100V/110V			2A									4A							
	AC200V/220V			1A									1A							
Perfor-mance	Short-time Withstand Current			22KA						25KA			35KA			50KA		50KA	50KA
	Rated Conditional Short Circuit Current			50KA						55KA			55KA			80KA		100KA	120KA
	Connecting and Breaking Capa-bility			AC-33B (10Ie Connect • 8Ie break) cos=0.35 DC-33B 1.1Ie Connect • 1.1Ie Break L/R = 1mst															
	Switch-ing Time	A power side	Control	115ms						115ms			180ms			140ms		200ms (190)	210ms (190)
			Break	25ms						25ms			25ms			30ms		30ms (30)	35ms (35)
		B power side	Control	145ms						150ms			150ms			190ms		220ms (240)	150ms (270)
			Break	25ms						25ms			25ms			30ms		30ms (30)	35ms (35)
	Life			Electrical: 2000 operations Mechanical: 8000 operations															
	Operating Recycles			120 operations / hour									30 operations /hour						
Auxiliary Switch				A power side 1C, B power side 1C, Switch Capacity AC100V 5A AC200V 2.5A DC100V 0.5A															
Accessories				Manual Operation Handle															

MCQ2 Main Technical Specifications

Model				MCQ2						
Rated Voltage				AC400V/690V DC125V / 250V						
Rated Current				20A-63A			80A 100A 125A		160A 200A 225A 250A	
Coil Quantity				Double Coils						
Wiring Method				Front						
Pole				2P	3P	4P	2P	3P	4P	2P	3P	4P
Weight (Kg)				4.5	5	5.5	5	5.5	6	6	8	10
Operating Current	DC100V (A)			3	3	4	3	3	4	3	4	5
	AC100V/110V (A)			3	3	4	3	3	4	3	4	5
	AC200V/220V (A)			1.5	1.5	2	1.5	1.5	2	1.5	2	2.5
Tripping Current	DC100V			1A								
	AC100V/110V			1A								
	AC200V/220V			0.5A								
Performance	Short-time Withstand Current			5KA						10KA		
	Rated Conditional Short Circuit Current			12.5KA						25KA		
	Connecting and Breaking Capability			AC-33B(10Ie connect • 8Ie break) cos=0.35 DC-33B 1.1Ie connect • 1.1Ie break L/R = 1ms								
	Switching Time	A power side	Control	55ms								
			Break	20ms								
		B power side	Control	80ms								
			Break	20ms								
	Life			Electrical: 2500 operations, Mechanical: 10000 operations								
	Operating Recycles			120 operations / hour								
Auxiliary Switch				A power side 1C, B power side 1C, Switch Capacity AC100V 5A AC200V 2.5A DC100V 0.5A								
Accessories				Manual Operation Handle								

Note: the outside dimension of MCQ2 Models Rated Current from 450A to 500A are the same as the 340A to 500A Models of the MCQ3.

Installation Dimensions

20A-63A

Panel Safe Distance (S1 Dimensions: 30mm (400V), 60mm (690V)

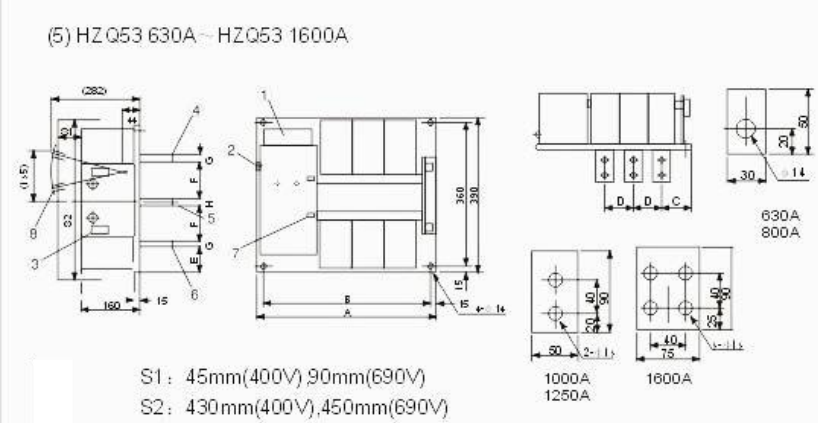

Type		630A 800A	1000A 1250A	1600A
A	2P	340	370	410
	3P	405	450	510
	4P	470	530	610
B	2P	310	340	380
	3P	375	420	480
	4P	440	500	580
C		80	88	97.5
D		65	80	100
E		60	60	57
F			117.5	
G			12/15	15
H			15	

80A-125A

Panel Safe Distance (S1 Dimensions: 30mm (400V), 60mm (690V)

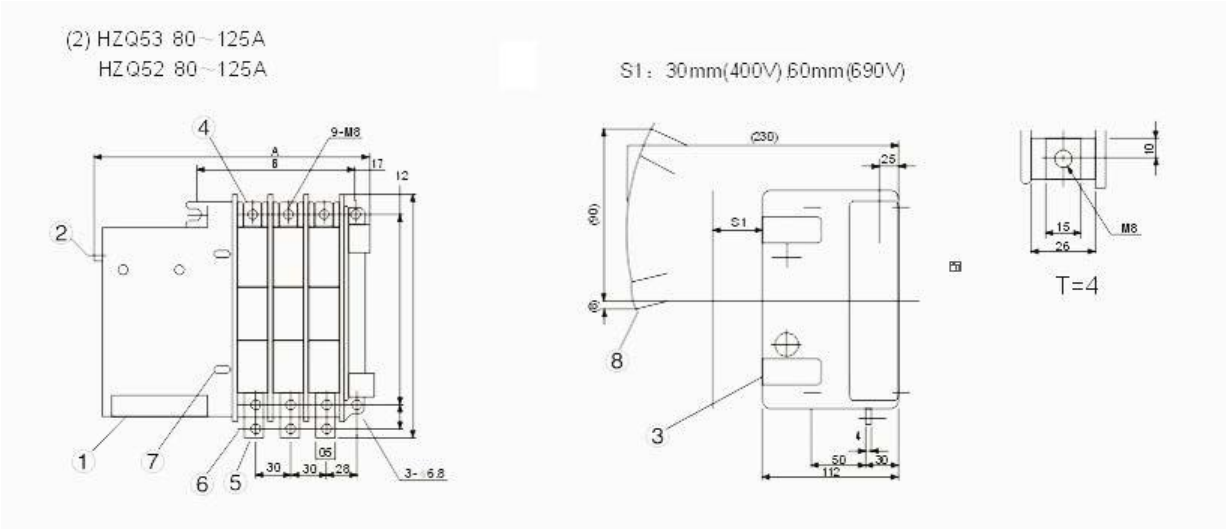

160A-250A

Panel Safe Distance (S1 Dimensions: 30mm (400V), 60mm (690V)

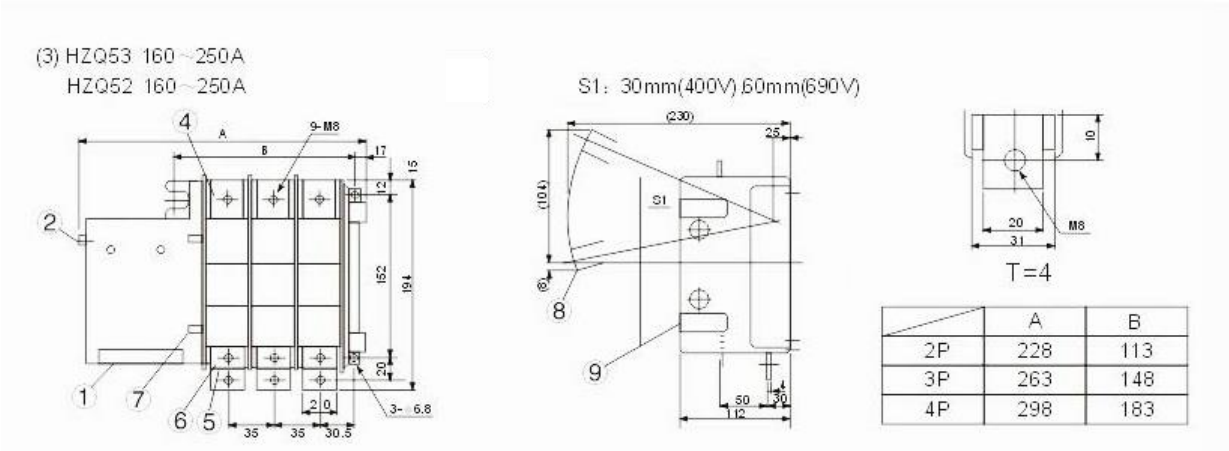

	A	B
2P	228	113
3P	263	148
4P	298	183

1 Operation Circuit Terminal
2 Manual Operation Handle Entrance
3 Auxiliary Switch
4 A Power Side Main Circuit Terminal
5 Loaded Side Main Circuit Terminal
6 B Power Side Main Circuit Terminal
7 ON / OFF Option Buttons
8 Manual Operation Handle (removable)

Installation Dimensions

(4) HZQ53 350～500A
HZQ52 350～500A

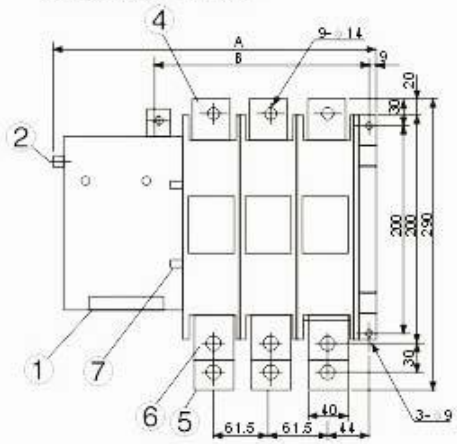

S1：30mm(400V),60mm(690V)

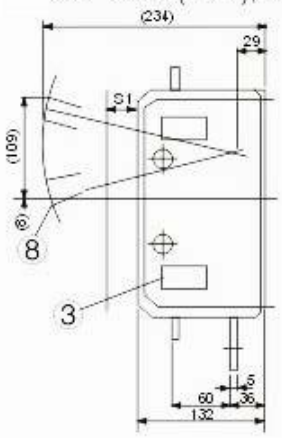

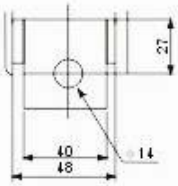

T=5

	A	B
2P	287	167
3P	348.5	228.5
4P	410	290

(5) HZQ53 630A～HZQ53 1600A

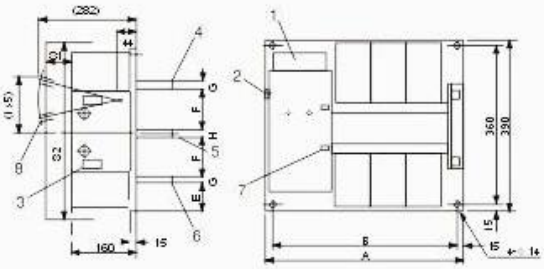

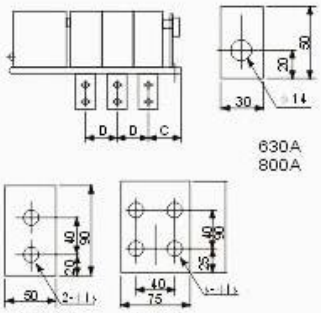

S1：45mm(400V),90mm(690V)
S2：430mm(400V),450mm(690V)

Type		630A 800A	1000A 1250A	1600A
A	2P	340	370	410
	3P	405	450	510
	4P	470	530	610
B	2P	310	340	380
	3P	375	420	480
	4P	440	500	580
C		80	88	97.5
D		65	80	100
E		60	60	57
F			117.5	
G			12/15	15
H			15	

Box Matching Dimensions

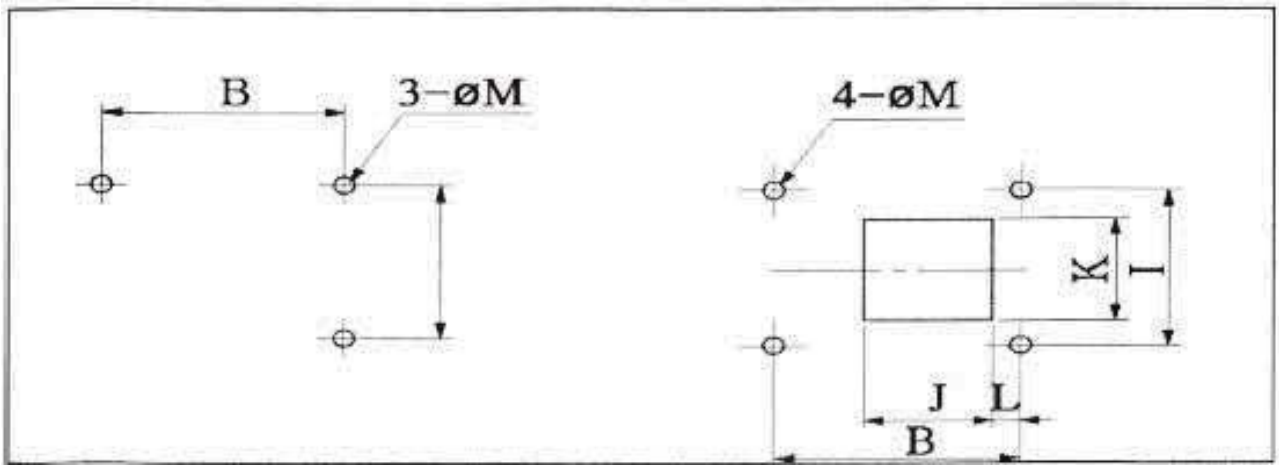

Figure I. Fixing Bolt Hole (front) Figure II. Fixing Bolt Hole and Panel Hole (back)

Model		MCQ3 100	MCQ3 250	MCQ3 400	MCQ3 630	MCQ3 800	MCQ3 1000	MCQ3 1250	MCQ3 1600	MCQ3 2000	MCQ3 2500	MCQ3 3150	MCQ3 4000
B	2P	103	113	164	310	310	340	340	380	460	500	685	685
	3P	133	148	224	375	375	420	420	480	595	645	915	915
	4P	163	183	284	440	440	500	500	580	790	790	1155	1155
I		152	152	200	360	360	360	360	360	420	420	420	420
J	2P	-	-	-	145	145	180	180	225	285	310	460	460
	3P	-	-	-	210	210	260	260	325	420	455	690	690
	4P	-	-	-	275	275	340	340	425	600	600	920	920
K		-	-	-	330	330	330	330	330	350	350	350	350
L		-	-	-	25	25	23	23	20	20	20	65	65
M		5.8	5.8	9	14	14	14	14	14	14	14	14	14
Figure		I			II								

Note:

1. Keep the wire bending pressure from placing directly on the terminal when connecting the main circuit terminal.

2. For the arc extinction distance outside the arc chute, please see the Outside Dimensions Part Figure I and Figure II.

3. Please connect the grounding wire to the terminal marked

Manual OperationInstructions

The terminals may be melted when operation under load due to different individual operation differences. Avoid using manual operation method if possible. Please operate as the following instructions if the manual operations are unavoidable.

1. Completely no operation power supply
2. When checking on operation mechanisms and contacting terminals under non-loaded conditions
3. In case of failure and elecric start can not be operated

Double segments **A, B power side Control Method**

Operate the handle manually, the notch will be inserted on the left side

Pull down the handle to control the switching of A/B power

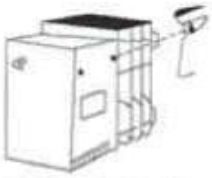

Verify by checking the ON / OFF indicator

Take down the handle after the operation

Triple segments **A, B power side Control Method**

1. Manual tripping method

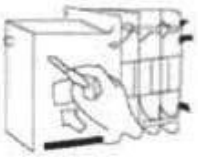

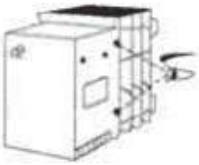

Insert screwdriver into the TRIP hole and press inside in order to trip after taking down the handle (please verify by checking the ON / OFF indicator)

2. A Side power control method

Operate the handle manually, the notch wil be inserted on the left side

Pull up the handle for control

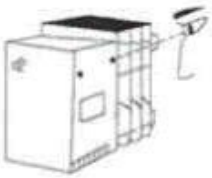

Verify by checking the ON / OFF indicator

Take down the handle after the operation

2. B Side power control method

Operate the handle manually, the notch will be inserted on the left side

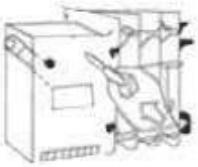

Insert screwdriver into the SELECT hole and press inside

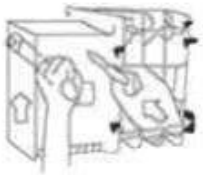

Press and hold, pull up the handle at the same time, and the B side switch is now being controlled

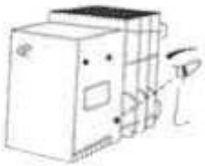

Verify by checking the ON / OFF indicator. Take down the handle after the operation

Typical Connection Diagram

MCQ2 Inside circuit diagram

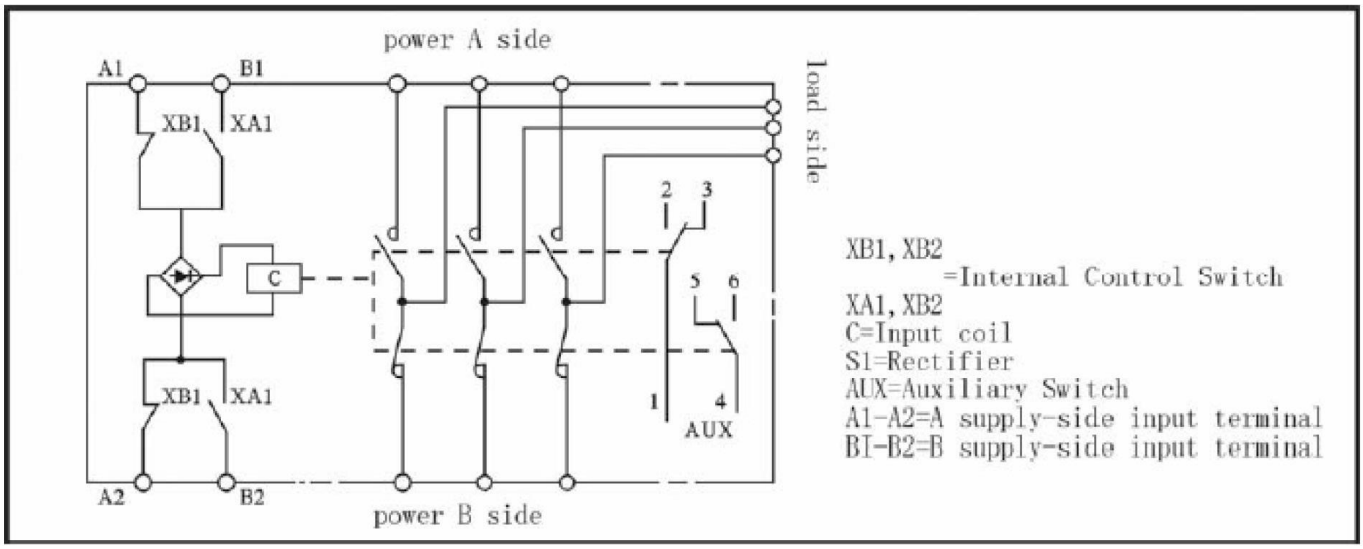

MCQ3 inside circuit diagram

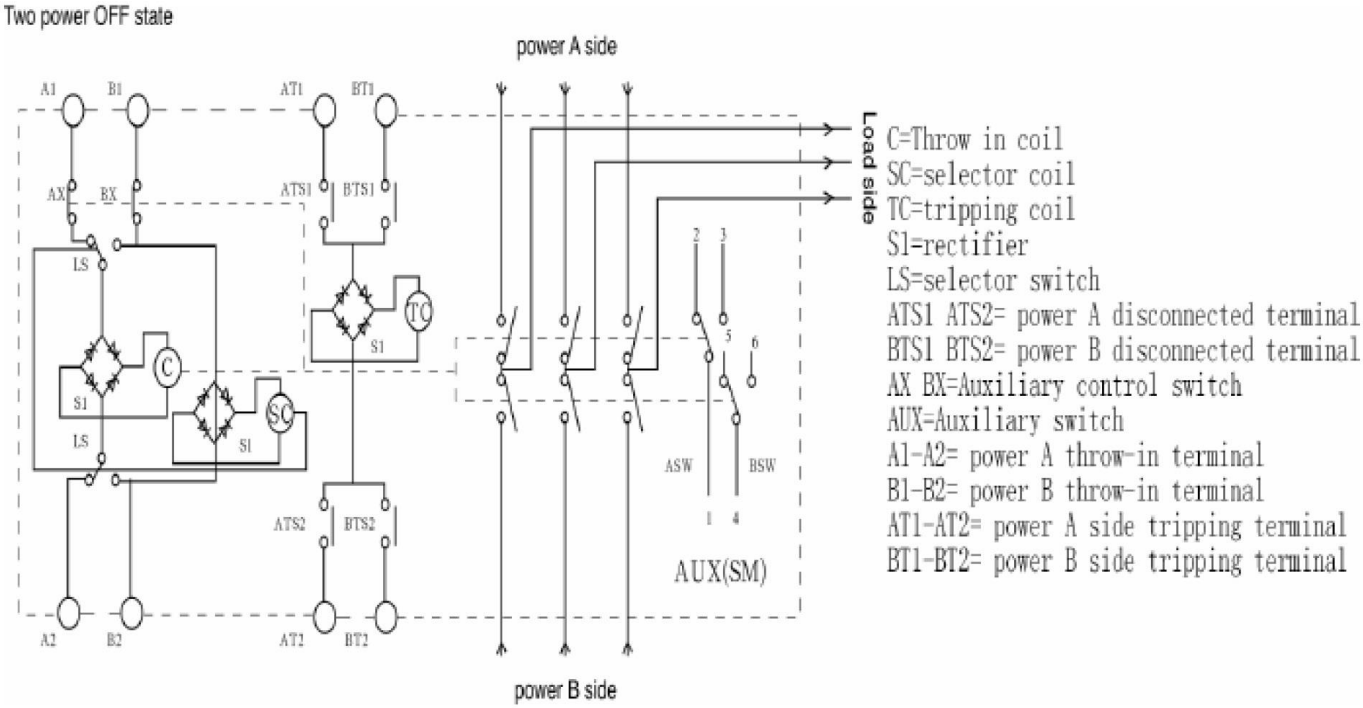

ATS Single Phase Connection Diagram

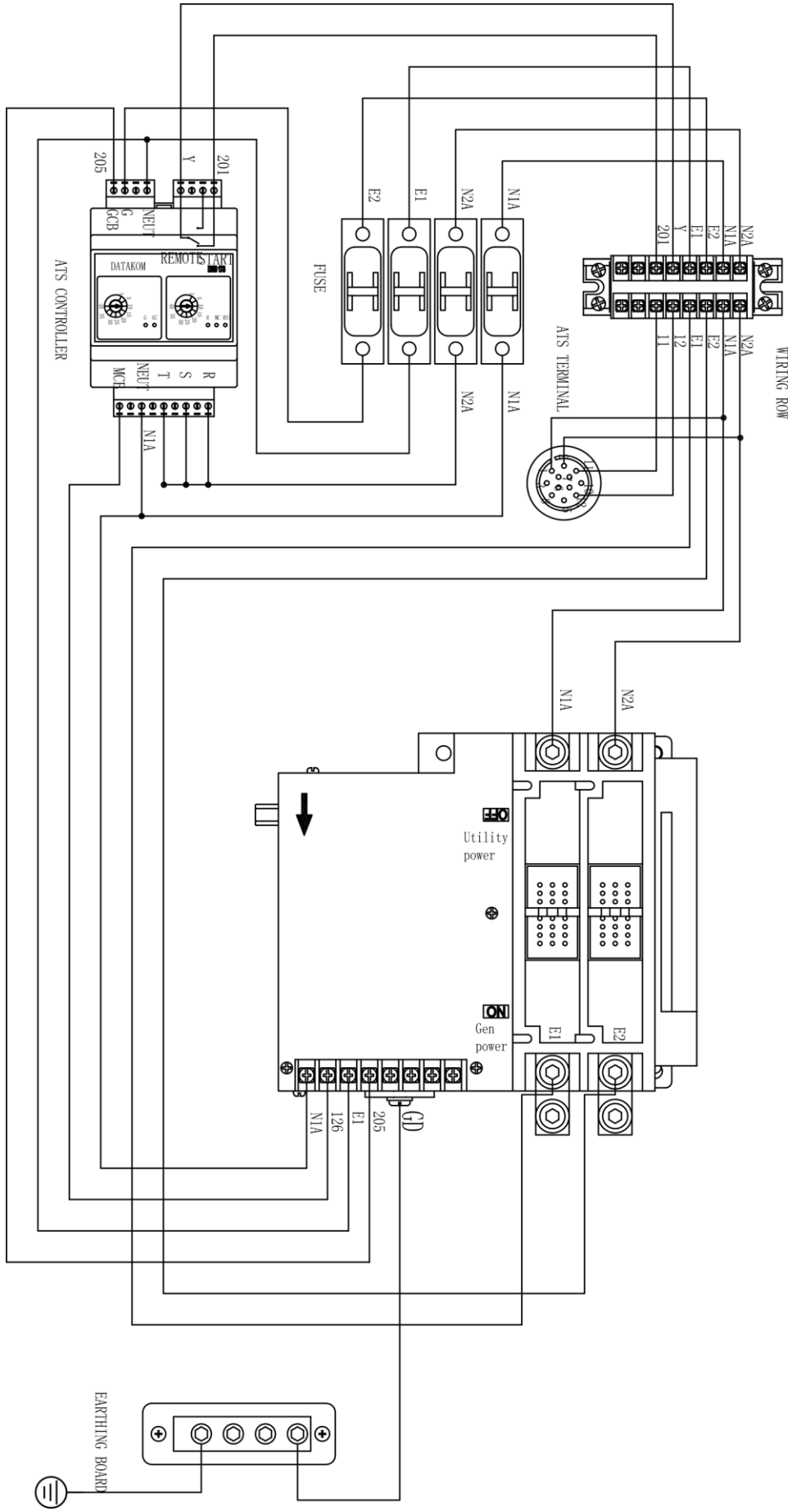

ATS Three Phase Connection Diagram

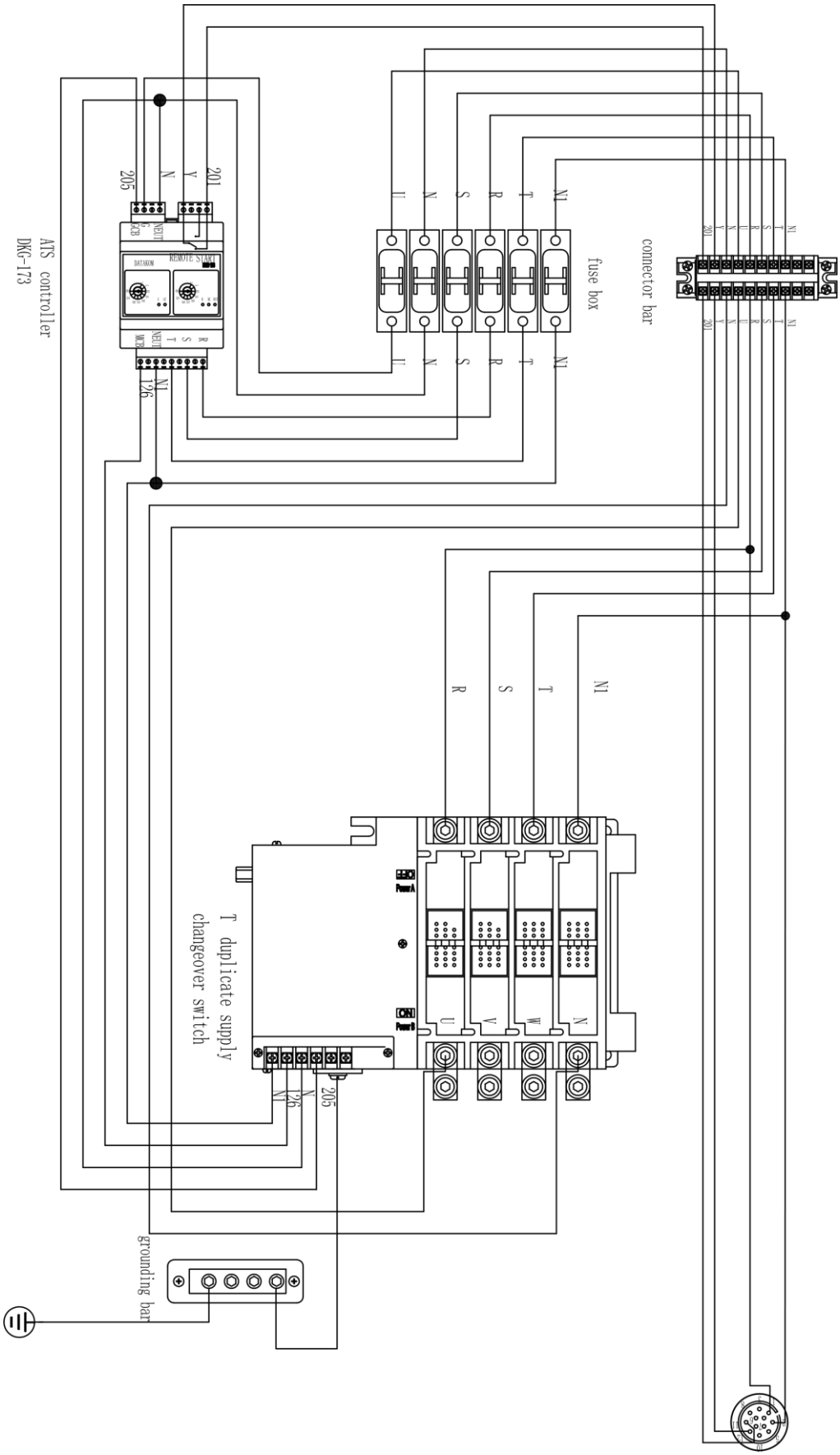

ATS Three Phase Exploded Diagram

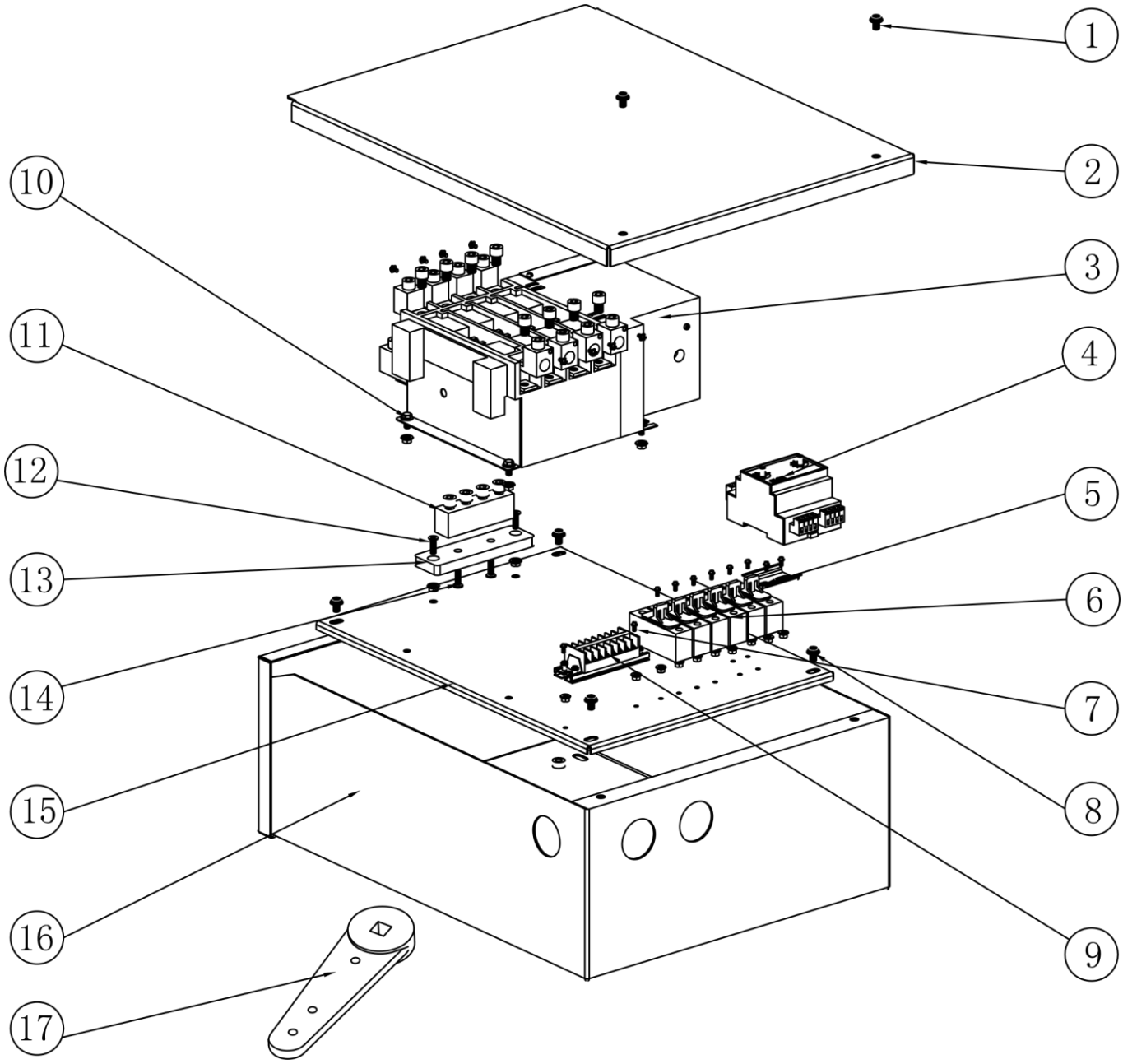

ATS Single Phase Exploded Diagram

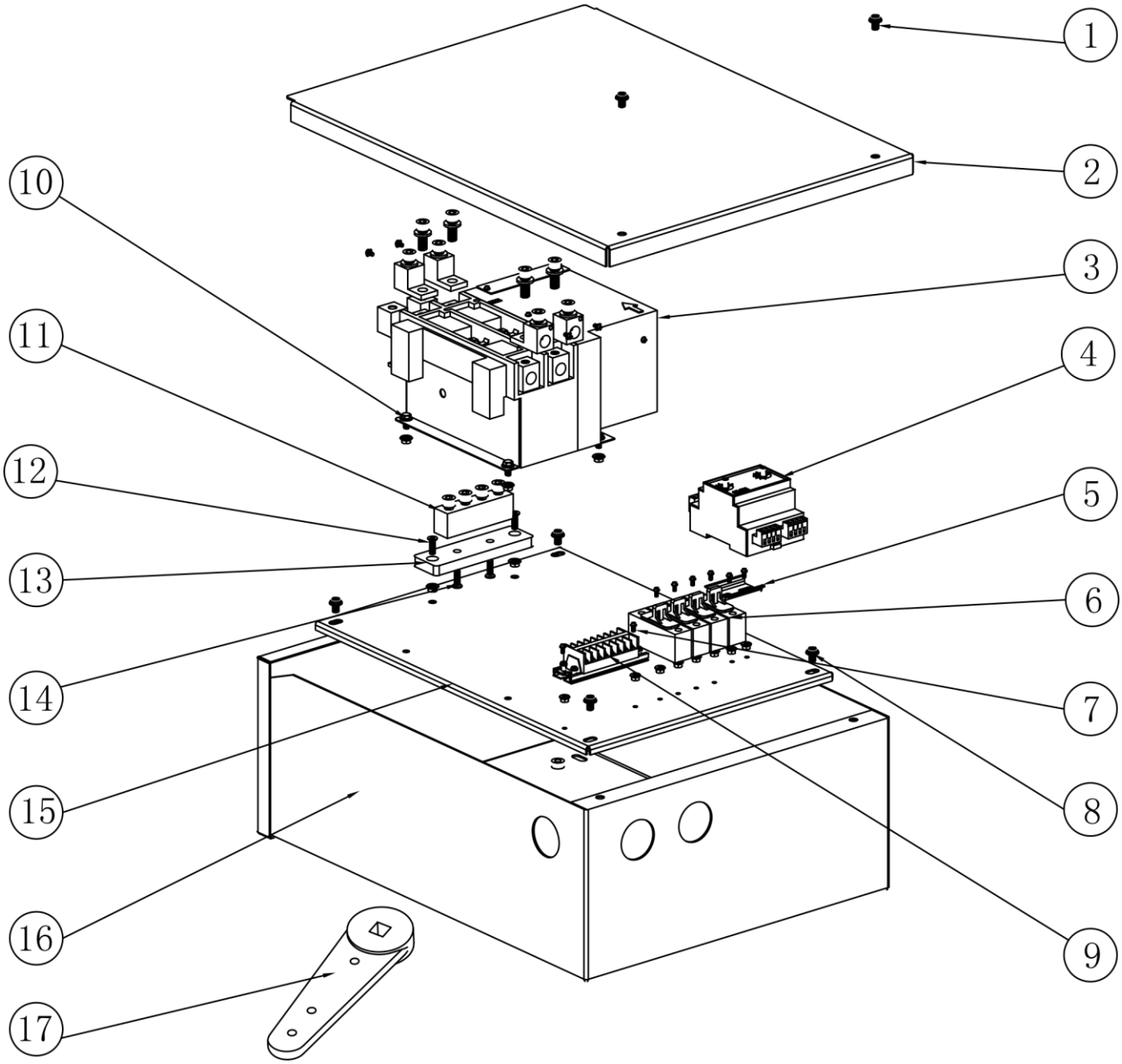

ATS Single Phase Installation Diagram

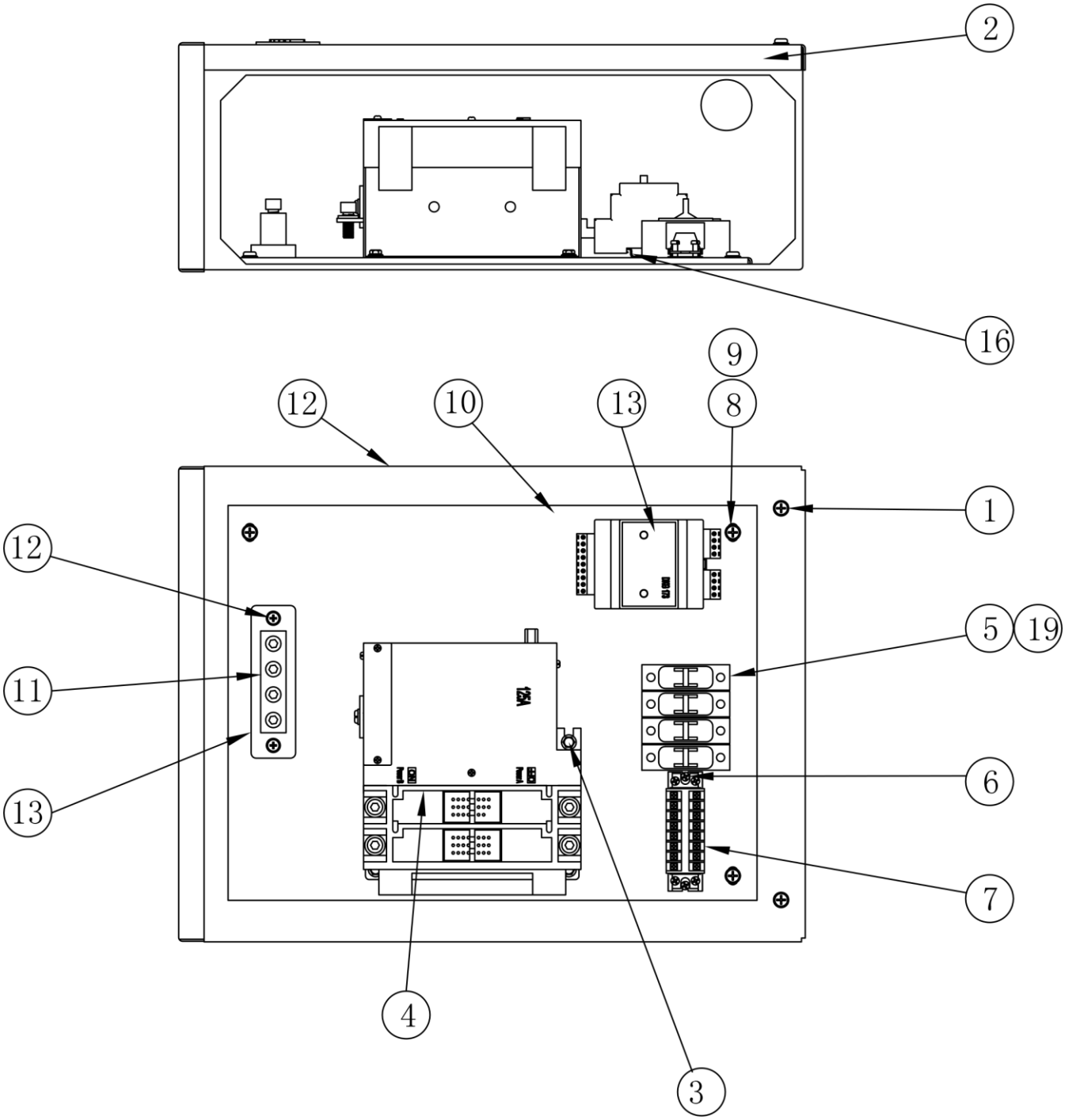

ATS Three Phase Installation Diagram

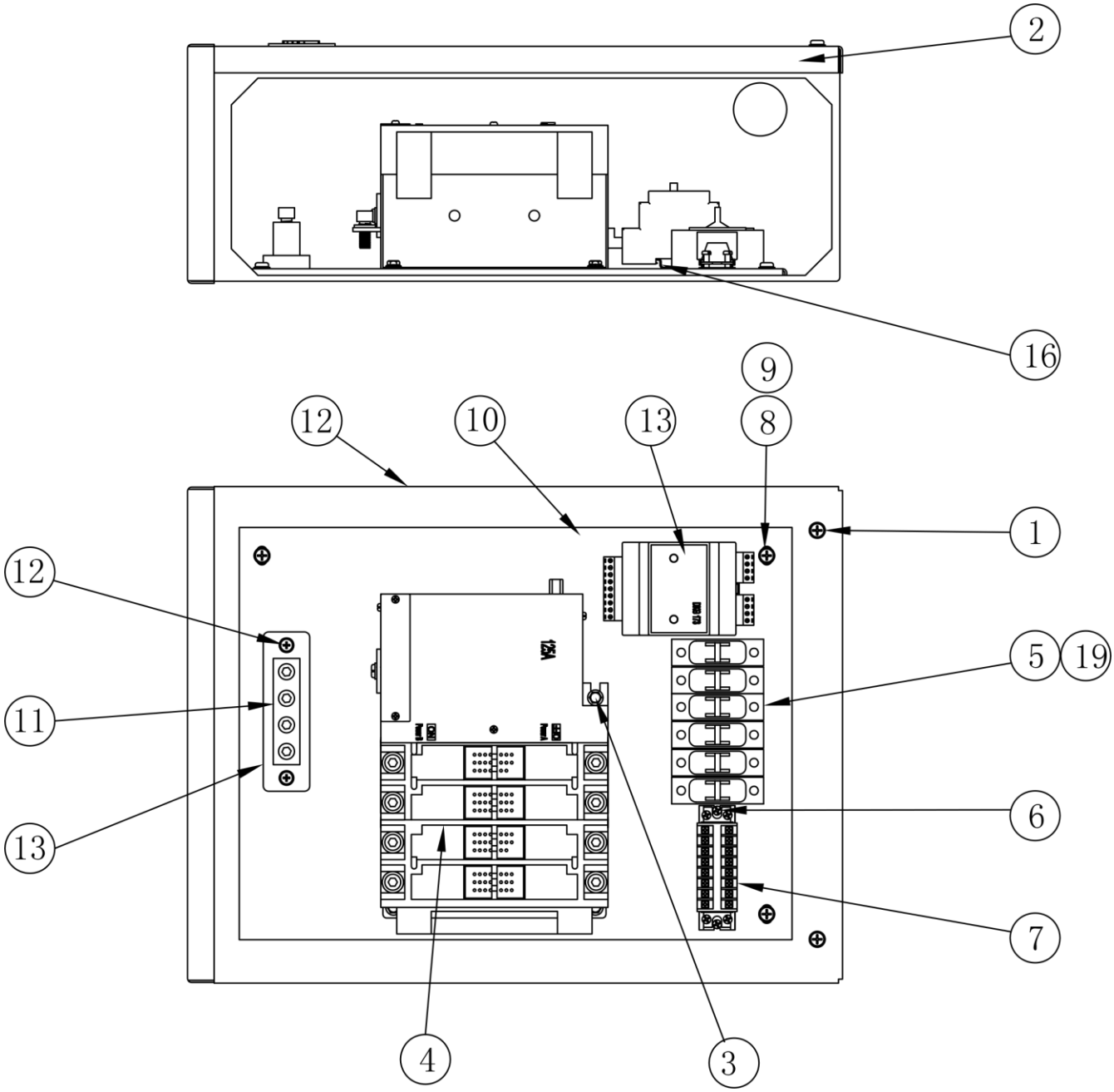

Parts List

ATS Single Phase Parts List			
No.	Parts Name	Quantity	Model
1	Round Cross-Head Screw	2	M6×1.0×10
2	ATS Box Upper Cover	1	
3	Hexagon flange bolts	3	M5×1.0×12
4	Transfer Switch	1	MCQ2-200A 2P
5	Fuse Base	4	OP530
6	Round Cross-Head Screw	8	M4×0.75×8
7	Connector Bar	2	15A-4P
8	Round Cross-Head Screw	4	M5×1.0×10
9	Gasket	4	M5×1.0×12
10	ATS Box Fixing Plate	1	
11	Nut	5	M5×1.0
12	ATS Box	1	
13	ATS Controller	1	DKG-173
14	Flat Cross-Head Screw	2	M5×1.0×12
15	Grounding Bar	1	
16	Mounting Bar	1	
17	Nut	8	M4×0.75
18	ATS Box Side Cover	1	
19	Fuse	4	10A
20	Handle Shank	1	

ATS Three Phase Parts List			
No.	Parts Name	Quantity	Model
1	Round Cross-Head Screw	2	M6×1.0×10
2	ATS Box Upper Cover	1	
3	Hexagon flange bolts	3	M5×1.0×12
4	Transfer Switch	1	MCQ2-200A 4P
5	Fuse Base	6	OP530
6	Round Cross-Head Screw	10	M4×0.75×8
7	Connector Bar	2	15A-4P
8	Round Cross-Head Screw	4	M5×1.0×10
9	Gasket	4	M5×1.0×12
10	ATS Box Fixing Plate	1	
11	Nut	5	M5×1.0
12	ATS Box	1	
13	ATS Controller	1	DKG-173
14	Flat Cross-Head Screw	2	M5×1.0×12
15	Grounding Bar	1	
16	Mounting Bar	1	
17	Nut	10	M4×0.75
18	ATS Box Side Cover	1	
19	Fuse	6	10A
20	Handle Shank	1	

ATS Control Box Installation Hole Diagram

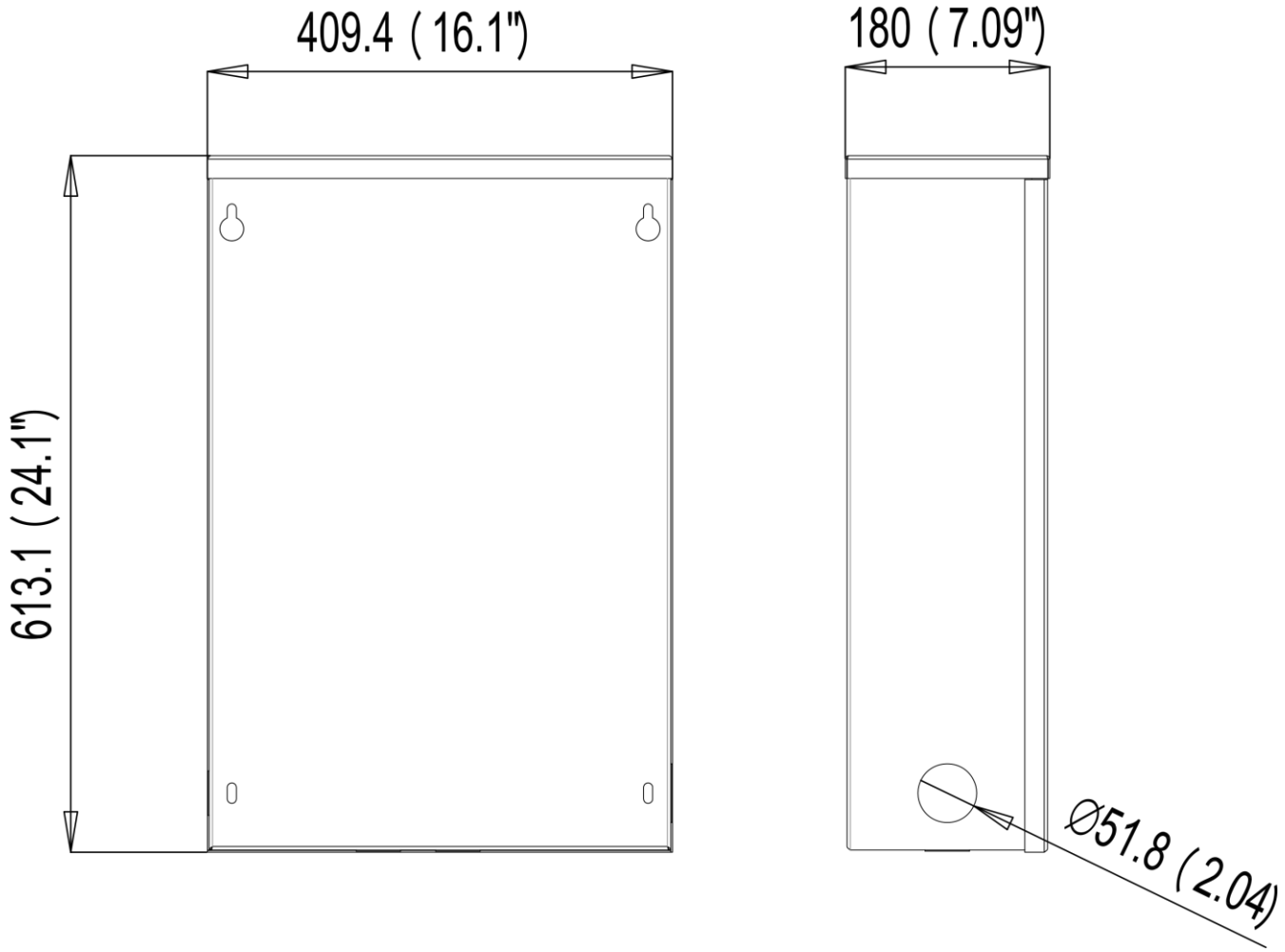

ATS Single Phase Connection Schematics

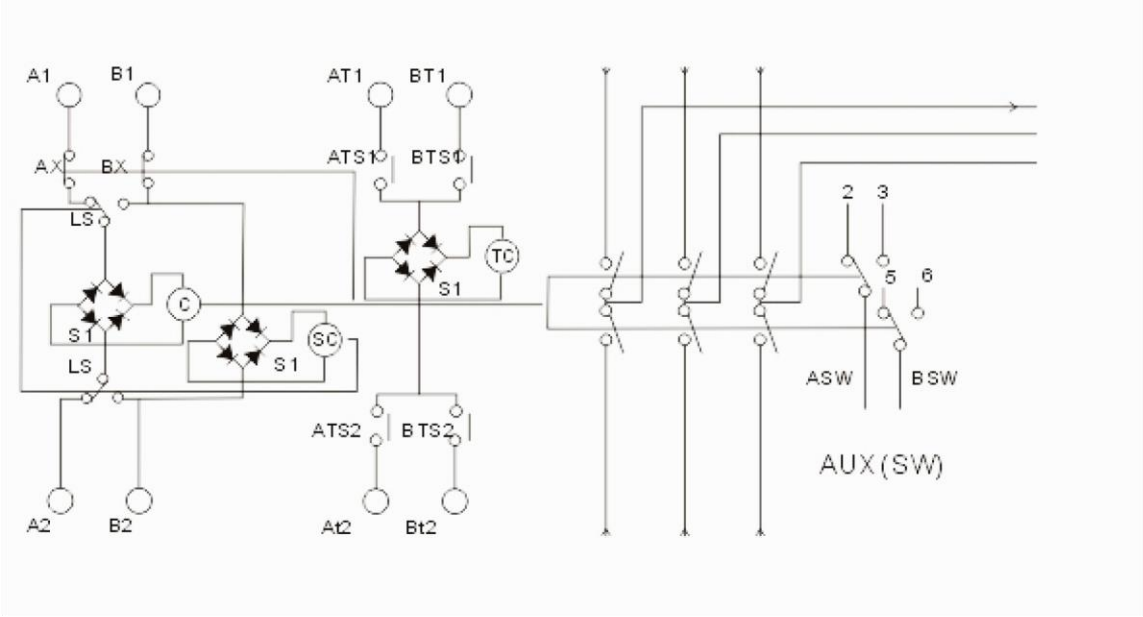

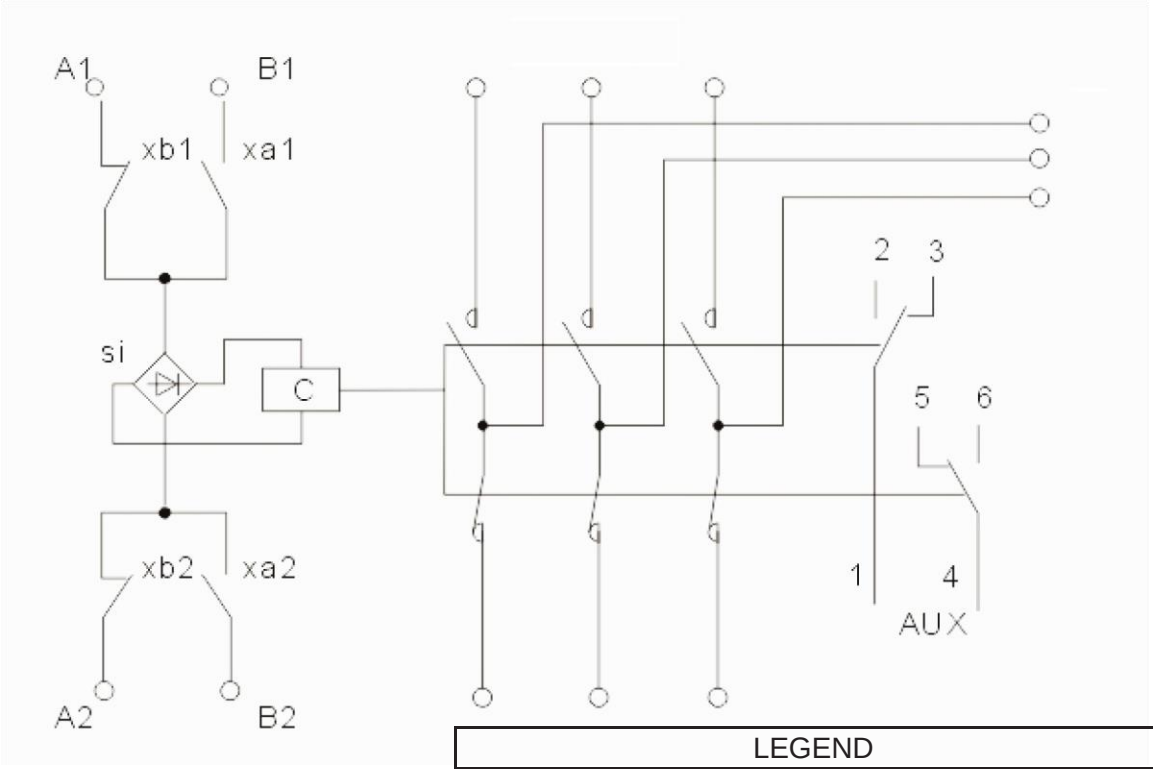

LEGEND	
ATS	Transfer Switch Contactor
C1	Solenoid Coil (utility closing)
C2	Solenoid Coil (standby closing)
TR	Relay Transfer
TB	Terminal Strip (customer connection)
XA1, XB1	Limit Switches Actuator
F1,F2,F3,F4	Fuse, 5a
VR1, VR2	Varistor
NB	Neutral Block

Note:
All contacts shown with transfer switch in utility position.

ATS Three Phase Connection Schematics

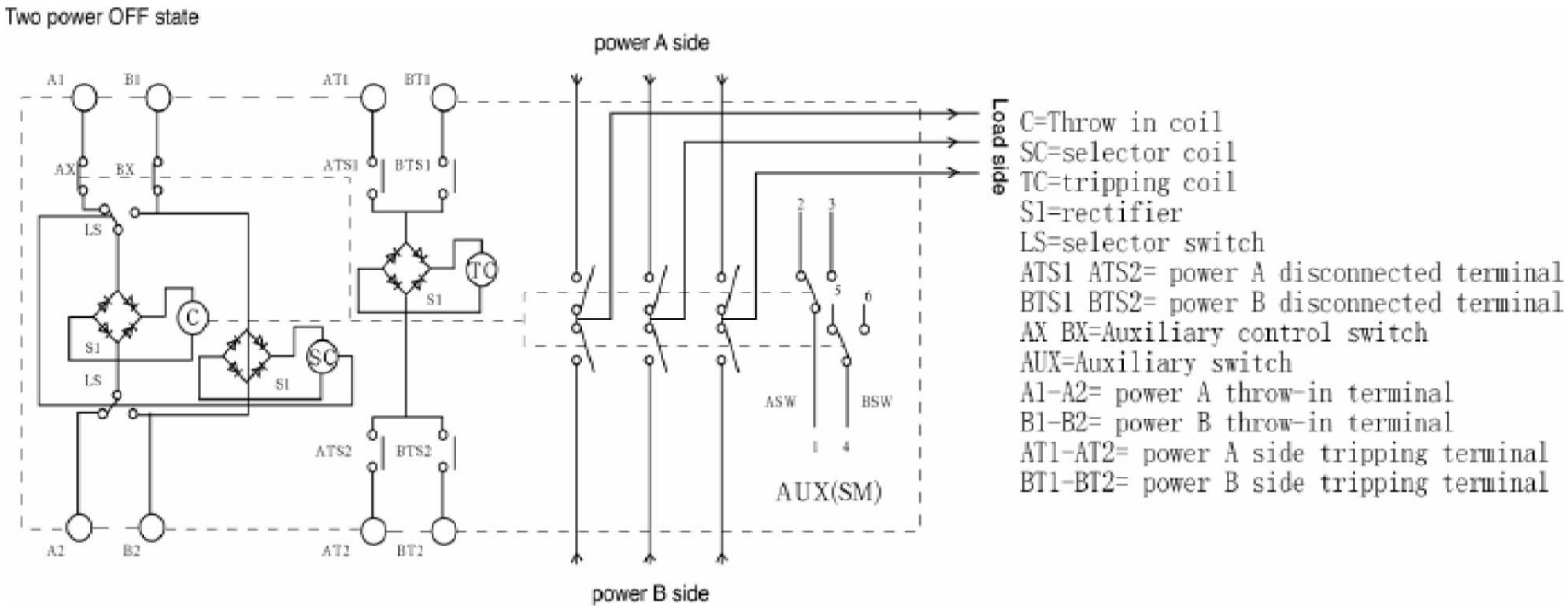

ATS Three Phase Connection Diagram

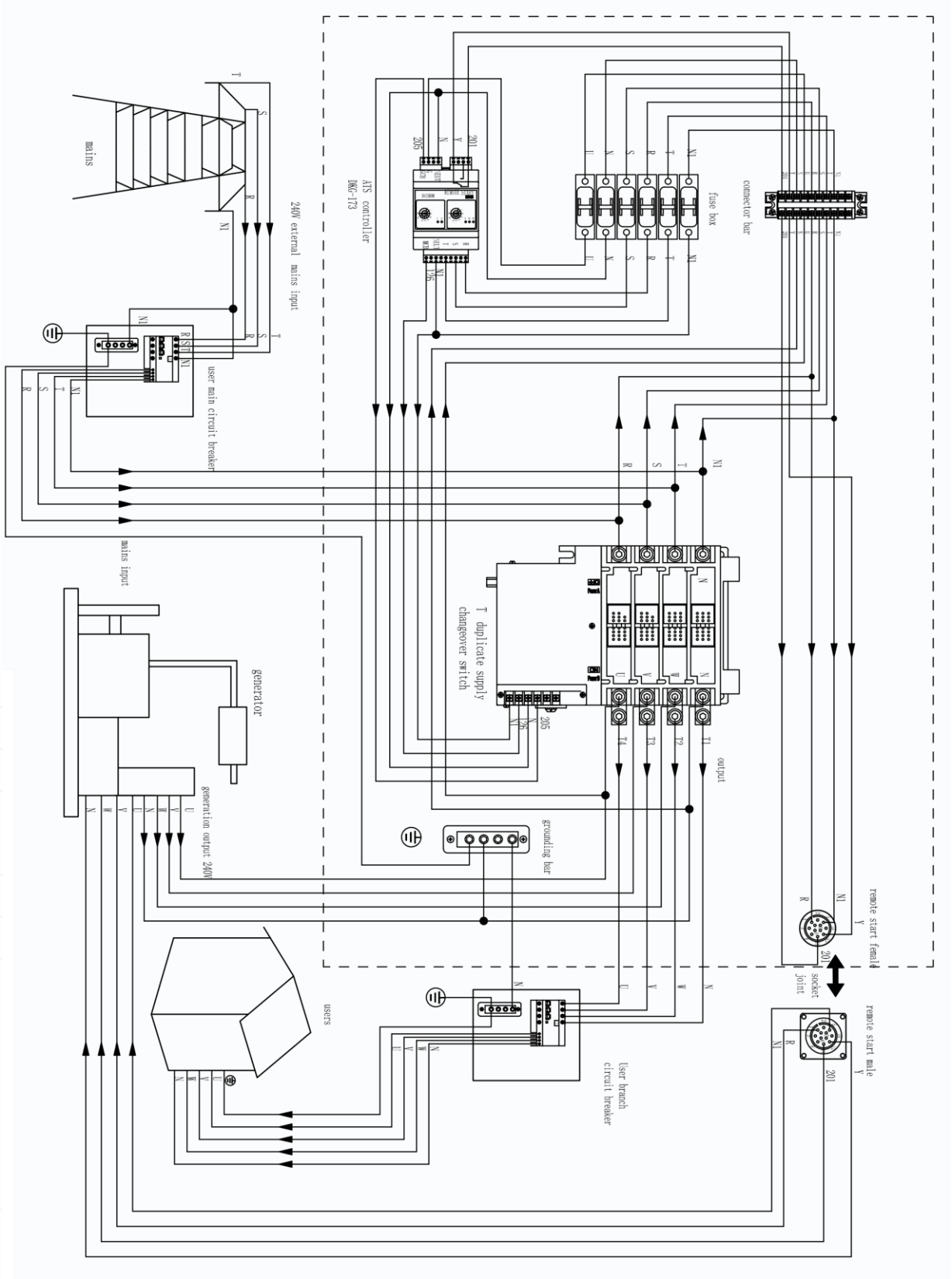

ATS Single Phase Connection Diagram

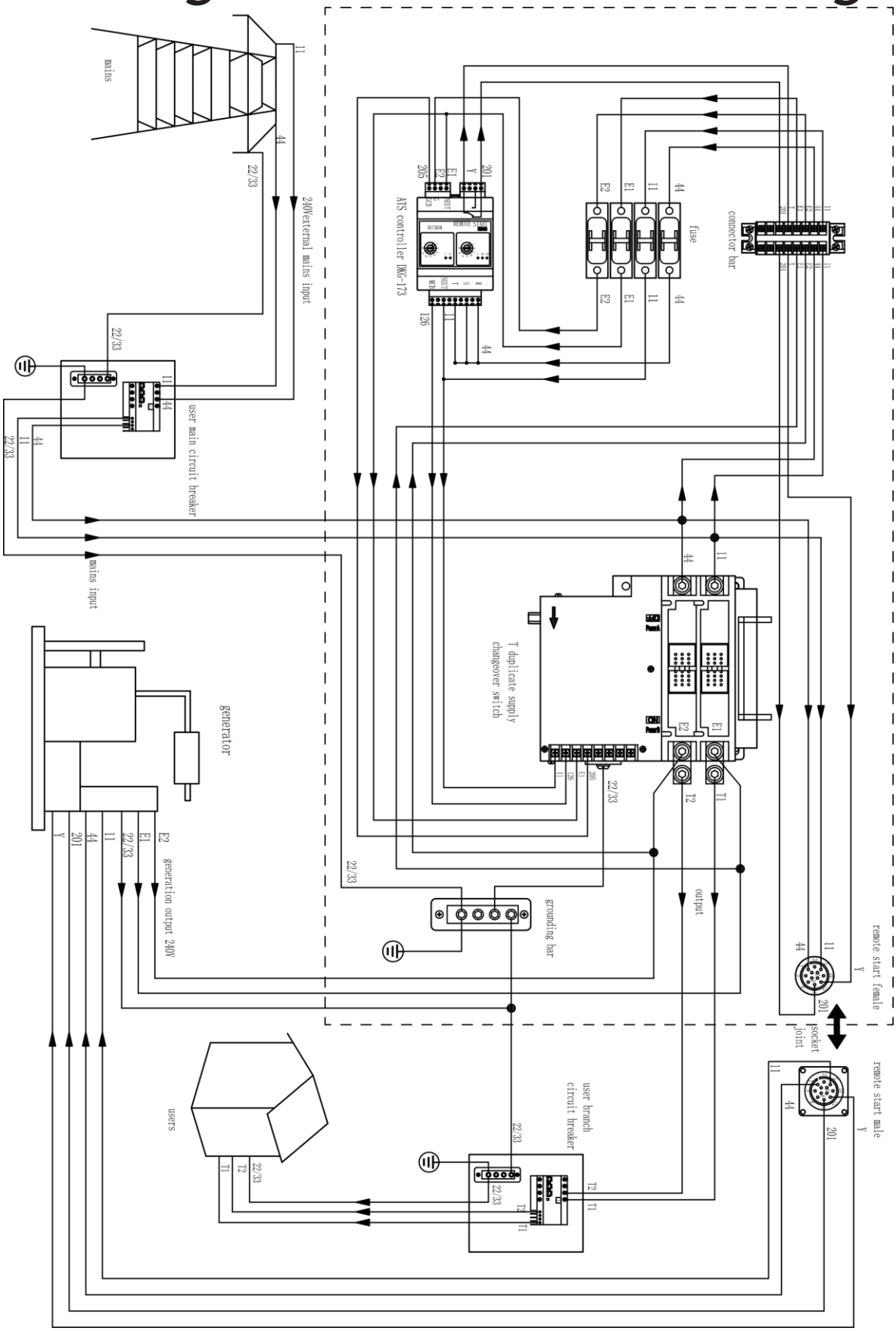

Maintenance & Service

The Free Warranty is 18 months from the date of delivery. The manufacturer will provide free reparation services for problems caused by product quality within this free warranty. Paid reparation or replacement services are available after the free warranty period.

Damage caused by the following reasons will be charged even if the products you purchased are still in the free warranty period:

1. Misconnection of wires, private disassembly & assembly or reparation

2. Exceed the standards, such as operations out of the current limits or over-testing over insulation voltage, etc.

3. External injury or damage due to drop or impact.

4. Natural hazards or abnormal disasters, such as earthquake, fire, thunder strike and abnormal voltage, etc.

Note:

Do not install in environments where there may be explosive gases, or explosion will happen.

Do not install in humid environments.

Do not install in places where its external magnetic field is 5 times larger than the earth's magnetic field, or the dual power cannot work properly.

Do not install in places where the vibration is larger than 5 grams.

Do not install in places where metal is vulnerable to gas corrosion and insulation material can be easily broken.

EQUIPSOURCE, LLC D/B/A LIFAN POWER USA
2205 Industrial Park Road
Van Buren, Arkansas 72956

(844) 367-5660
Fax: (479) 471-7466

www.lifanpowerusa.com

(3/26/2020)